TM 11-5985-263-15

DEPARTMENT OF THE ARMY TECHNICAL MANUAL

OPERATOR'S, ORGANIZATIONAL, DIRECT SUPPORT,

GENERAL SUPPORT, AND DEPOT MAINTENANCE MANUAL

INCLUDING REPAIR PARTS

AND SPECIAL TOOL LISTS

MAST AB-903/G

(NSN 5985-00-933-2197)

This copy is a reprint which includes current pages from Changes 1 and 2. The title was changed by Change 2.

HEADQUARTERS, DEPARTMENT OF THE ARMY

MAY 1970

CONDENSED OPERATING INSTRUCTIONS FOR ANTENNA MAST AB-903/G

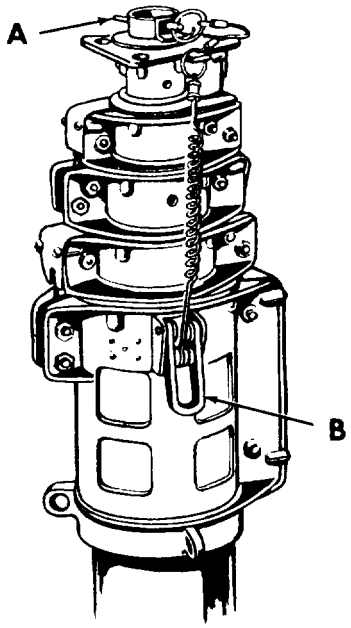

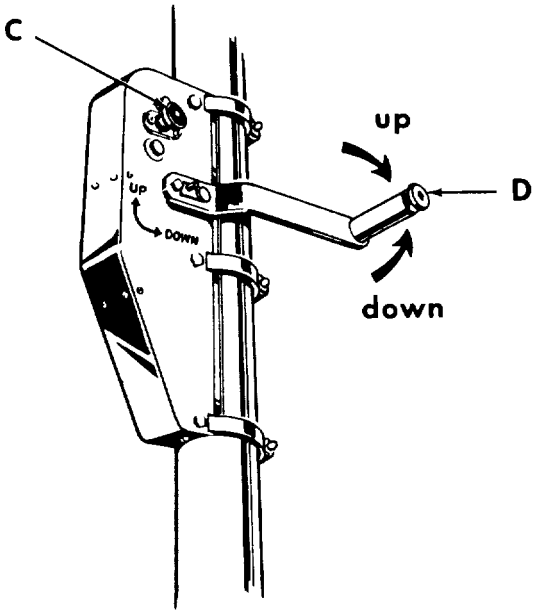

TO RAISE MAST, *HAND-OPERATED:*

1. REMOVE PIN A.
2. RELEASE SPRING RETAINER B.
3. EXTRACT LOCKING PIN C AND ROTATE 90° TO LOCK-OUT POSITION.
4. CRANK HANDLE D IN DIRECTION SHOWN.

   CAUTION: DO NOT RAISE MAST TO FULL HEIGHT IF WINDS ARE IN EXCESS OF 35 MPH OR MAST IS OUT OF VERTICAL POSITION BY MORE THAN 7°.

5. CRANK APPROXIMATELY 54 TURNS TO FULL UP POSITION.
6. LOCK THE MAST IN UP POSITION WITH LOCKING PIN C.

TO LOWER MAST, *HAND-OPERATED:*

7. EXTRACT LOCKING PIN C AND ROTATE 90° TO LOCK-OUT POSITION.
8. CRANK HANDLE D IN DIRECTION SHOWN.
9. CRANK UNTIL DESIRED POSITION IS REACHED.
10. ENGAGE LOCKING PIN C.

EL5985–263-12-TM-11 ①

Condensed operating instructions for Antenna Mast AB–903/G.

WARNING

Contact between the antenna elements, antenna mast, and high voltage sources must be avoided at all times. Maintain a safe distance (twice the height of the antenna) when erecting and operating the antenna in the vicinity of high-tension lines. Make sure that all instructions covering whip antennas and antenna masts detailed in TB SIG 291 are met before attempting to erect or operate the antenna equipment.

TECHNICAL MANUAL
No. 11-5985-263-15

HEADQUARTERS
DEPARTMENT OF THE ARMY
WASHINGTON, DC, *20 May 1970*

OPERATOR, ORGANIZATIONAL, DIRECT SUPPORT, GENERAL SUPPORT, AND DEPOT MAINTENANCE MANUAL
MAST AB-903/G (NSN 5985-00-933-2197)

		Paragraph	Page
CHAPTER 1.	INTRODUCTION		
Section I.	General	1-1 – 1-3	1-1
II.	Description and data	1-4 – 1-10	1-1
CHAPTER 2.	INSTALLATION		
Section I.	Service upon receipt of equipment	2-1, 2-2	2-1
II.	Ground-mounting installation	2-3 – 2-7	2-1
III.	Counterpoise assembly and Antenna AS-1729/VRC	2-8, 2-9	2-5
CHAPTER 3.	OPERATION	3-1, 3-2	3-1
4.	OPERATOR AND ORGANIZATIONAL MAINTENANCE		
Section I.	Operator's maintenance	4-1 – 4-6	4-1
II.	Organizational maintenance	4-7 – 4-13	4-2
CHAPTER 5.	MECHANICAL FUNCTIONING OF MAST AB-903/G	5-1 – 5-5	5-1
6.	DIRECT SUPPORT MAINTENANCE		
Section I.	Maintenance instructions	6-1 – 6-6	6-1
II.	Testing procedures	6-7, 6-8	6-2
CHAPTER 7.	GENERAL SUPPORT MAINTENANCE	7-1 – 7-8	7-1
8.	DEPOT MAINTENANCE	8-1, 8-2	8-1
9.	SHIPMENT, LIMITED STORAGE, AND DEMOLITION TO PREVENT ENEMY USE		
Section I.	Shipment and limited storage	9-1, 9-2	9-1
II.	Demolition of materiel to prevent enemy use	9-3, 9-4	9-2
APPENDIX A.	REFERENCES		A-1
B.	BASIC ISSUE ITEMS		
Section I.	Introduction	B-1 – B-3	B-1
II.	Basic issue items list		B-2
C.	MAINTENANCE ALLOCATION		
Section I.	Introduction	C-1 – C-4	C-1
II.	Maintenance allocation chart for Mast AB-903/G		C-3
III.	Tool and test equipment requirements for Mast AB-903/G		C-4
IV.	Remarks		C-5
APPENDIX D.	Deleted		
INDEX			I-1

*This manual supersedes TM 11-5985-263-12, 14 August 1967

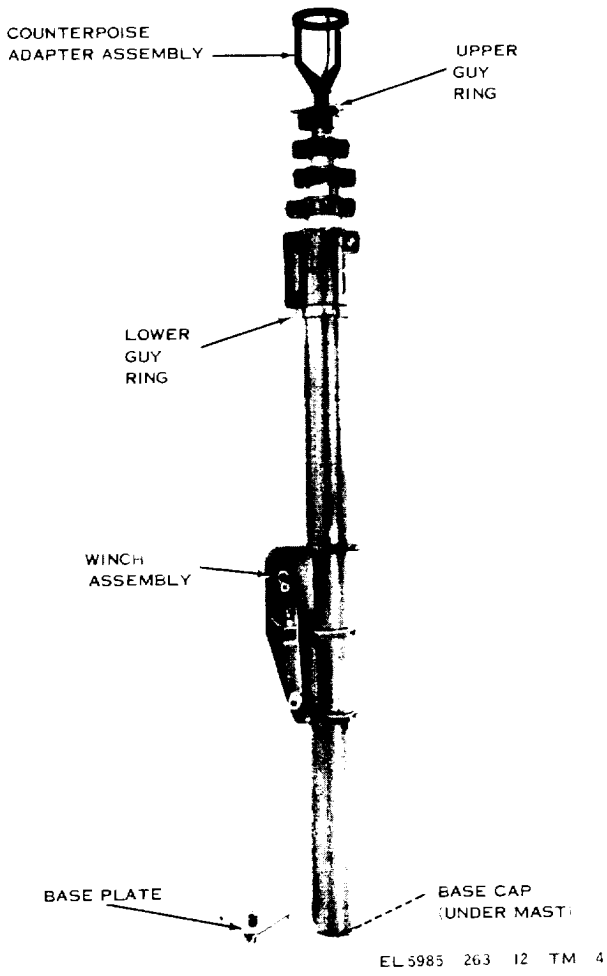

Figure 1-1. Mast AB-903/G, less ground-mounting components.

CHAPTER 1
INTRODUCTION

Section 1. GENERAL

1-1. Scope

a. This manual describes Mast AB-903/G (fig. 1-1) and covers its installation, operation, direct and general support, and depot maintenance.

b. The basic issue items list appears in appendix B, the maintenance allocation chart appears in appendix C, and the repair parts and special tool lists appear in TM 11-5985-263-34P.

NOTE

Appendix C is current as of June 15 1978.
Appendix B is current as of 5 May 1973.

1-2. Indexes of Publications

a. DA Pam 310-4. Refer to the latest issue of DA Pam 310-4 to determine whether there are new editions, changes, or additional publications pertaining to the equipment.

b. DA Pam 310-7. Refer to DA Pam 310-7 to determine whether there are modification work orders (MWO's) pertaining to the equipment.

1-3. Forms and Records

a. Reports of Maintenance arid Unsatisfactory Equipment. Maintenance forms, records, and reports which are to be used by maintenance personnel at all maintenance levels are listed in and prescribed by TM 38-750.

b. Report of Packaging and Handling Deficiencies. Fill out and forward DD Form 6 (Packaging Improvement Report) as prescribed in AR 700-58/NAVSUPINST 4030-29/AFR 71-13/MCO P4030.29A, and DSAR 4145.8.

c. Discrepancy in Shipment Report (DISREP) (SF 361). Fill out and forward Discrepancy in Shipment Report (DISREP) (SF 361) as prescribed in AR 55-38/NAVSUPINST 4610.33B/AFR 75-18/MCO P4610.19C and DLAR 4500.15.

1-3.1. Reporting of Errors

The reporting of errors, omissions, and recommendations for improving this publication by the individual user is encouraged. Reports should be submitted on DA Form 2028 (Recommended Changes to Publications) and forwarded direct to Commander, US Army Communications and Electronics Materiel Readiness Command, ATTN: DRSEL-ME-MQ, Fort Monmouth, NJ 07703.

1-3.2. Reporting Equipment Improvement Recommendations (EIR)

EIR's will be prepared using Standard Form 368, Quality Deficiency Report. Insturctions for preparing EIR's are provided in TM 38-750, the Army Maintenance Management System, EIR's should be mailed direct to Commander, US Army Communications and Electronics Materiel Readiness Command, ATTN: DRSEL-ME-MQ, Fort Monmouth, NJ 07703. A reply will be furnished direct to you.

Section II. DESCRIPTION AND DATA

1-4. Purpose and Use

a. Mast AB-903/G provides the means to raise such antennas as Antenna AS-1729/VRC 30 feet above ground level. The retracted height of the mast is 72 inches. The mast may be set up on the ground, or mounted on vehicles. The mast maybe raised to full height by handcranking.

b. Figure 1-1 illustrates the general arrangement of the mast on the ground.

1-5. Technical Characteristics

Height retracted	6 feet.
Height extended	29 feet, 3 inches.
Method of extending mast	Cable-driven telescope tubular sections activated by crank handle.
Time required to raise mast (after installation of group).	25 seconds by hand.
Tube sizes	4 1/4-inch diameter to 1 1/2-inch diameter.
Number of tubular segments	6.
Installation provisions	Ground or vehicular.
Number of guys	6 for ground installation.
Number of stakes	3.
Material	Aluminum alloy tubing, corrosion-resistant cables and hardware, aluminum alloy mounting brackets, Dacron guy ropes.
Weight:	
Mast	40 pounds.
Mounting brackets, guys, anchors.	14.75 pounds.
Maximum wind loading	35 mph without top guys; 50 mph with top guys.
Load limitation	20 lb masthead load over area of 2 square feet (Maximum allowable load on extended mast).

1-6. Table of Components

The components of Mast AB-903/G are listed in the following table (figs. 1-2 and 1-3):

Quantity	Item	Dimensions (in.) Height	Depth	Width	Unit weight (lb)
1	Mast assembly (FSN 5985-933-2197)	72	5	9	40.0
3	Guy assemblies, lower [a]	23 ft	...	...	0.3
3	Guy assemblies, upper [a]	42 ft	...	...	0.6
1	Basplate [a]	1 5/8	6	6	0.4
3	Stake, guy [a]	18 1/2	2	2	1.25
1	Adapter, antenna	8	...	3	.3
1	Handle, crank [a]	8 3/4	5 1/2	1 1/4	1.0
1	Bag, accessory	10	12	21	2.75
1	Hammer [a]	...	...	...	2.25

[a] Indicates item is contained in accessory bag.

NOTE

Where ground stakes are used in arctic regions, a hammer has been provided to aid in driving the stakes into the ground.

1-6.1. Items Comprising an Operable Mast AB-903/G

FSN	*Qty*	*Nomenclature, part No., and mfr code*	*Fig.*
		The part number is followed by the applicable 5-digit Federal supply code for manufacturers (FSCM) identified in SB 708-42 and used to identify manufacturer, distributor, or Government agency, etc.	
5985-933-2197		Mast AB-903/G: 1054-101; 81868 (This is nonexpendable which includes):	
5985-089-5020		Adapter Antenna: (1 ea), 1054-401-1; 81868	
5985-089-5610		Cable Counterpoise: (1 ea), 1054-403-1; 81868	
5985-933-2193		Guy, Lower: (3 ea), 1054-301-1; 81868	
5985-933-2187		Guy, Upper: (3 ea), 1054-301-2; 81868	
5985-089-5618		Plate, Base, Mast: (1 ea), 1054-303-1; 81868	1-3
		Stake Assembly, Guy: (3 ea), 425-658-1; 81868	1-3
5985-914-8055		Tube Counterpoise: (3ea), 1054-402-1; 81868	5-7
5985-933-2188		Tube Counterpoise: (1 ea), 1054-402-2, 81868	

1-7. Description of Mast AB-903/G

a. Mast AB-903/G (figs. 1-1, 1-2, and 1-3) is a cable-driven, lightweight, telescope mast assembly. A crank handle attached to the winch assembly is used to raise or lower the mast. The cable inside the winch assembly raises only the largest movable diameter mast section. Each of the other sections are independently connected by cables. The raising of this largest sec-

tion exerts pressure on an independent set of cables connecting to the second largest mast section which, in turn, causes it to raise. The second largest section raises the third largest section in a similar manner, and the third section raises the fourth largest section. The fourth largest raises the fifth largest (smallest diameter) section to which the appropriate antenna mount is attached. The motion is cumulative, and as a result, the section to which the antenna mount is connected moves most rapidly, and the largest diameter section moves most slowly. Operation will clearly show how the motion is transferred from one mast section to the other. Operation is discussed in paragraph 3-2.

b. Other features of the mast are the locking pin (fig. 3-1) and the winch brake (fig. 5-2). Inside the winch assembly is a winch brake which is so designed that when the mast is being raised no pressure is exerted on the winch mechanism; however, whenever the mast tends to lower, either from the weight of the antenna and antenna mount, or when being cranked down, the winch brake applies pressure to the winch mechanism, preventing the mast from being lowered too rapidly and keeps it at any stopped height. The locking pin is used to lock the mast in any position; that is, fully erected, fully lowered, or any position in between.

c. When the mast is being transported or stored, a toggle-lock mechanism with a spring and a stop (safety) pin (fig. 1-4) are used to secure all mast sections to prevent unnecessary movement between the mast sections. The mast may be locked only when it is fully retracted.

d. The mast may be used in ground installation or in vehicular operation. Ground installation and operation will be discussed in this manual. A typical vehicular installation in a M151A1 vehicle is shown in figure 1-2. For detailed vehicular installation, refer to pertinent manual for that vehicle.

1-8. Description of Minor Components

Included with the mast are the following minor components:

a. A canvas accessory bag for storing components when not in use.

b. A base plate required for ground installation.

c. Three ground stakes.

d. Three upper and three lower guy assemblies.

e. A crank handle.

f. Hammer.

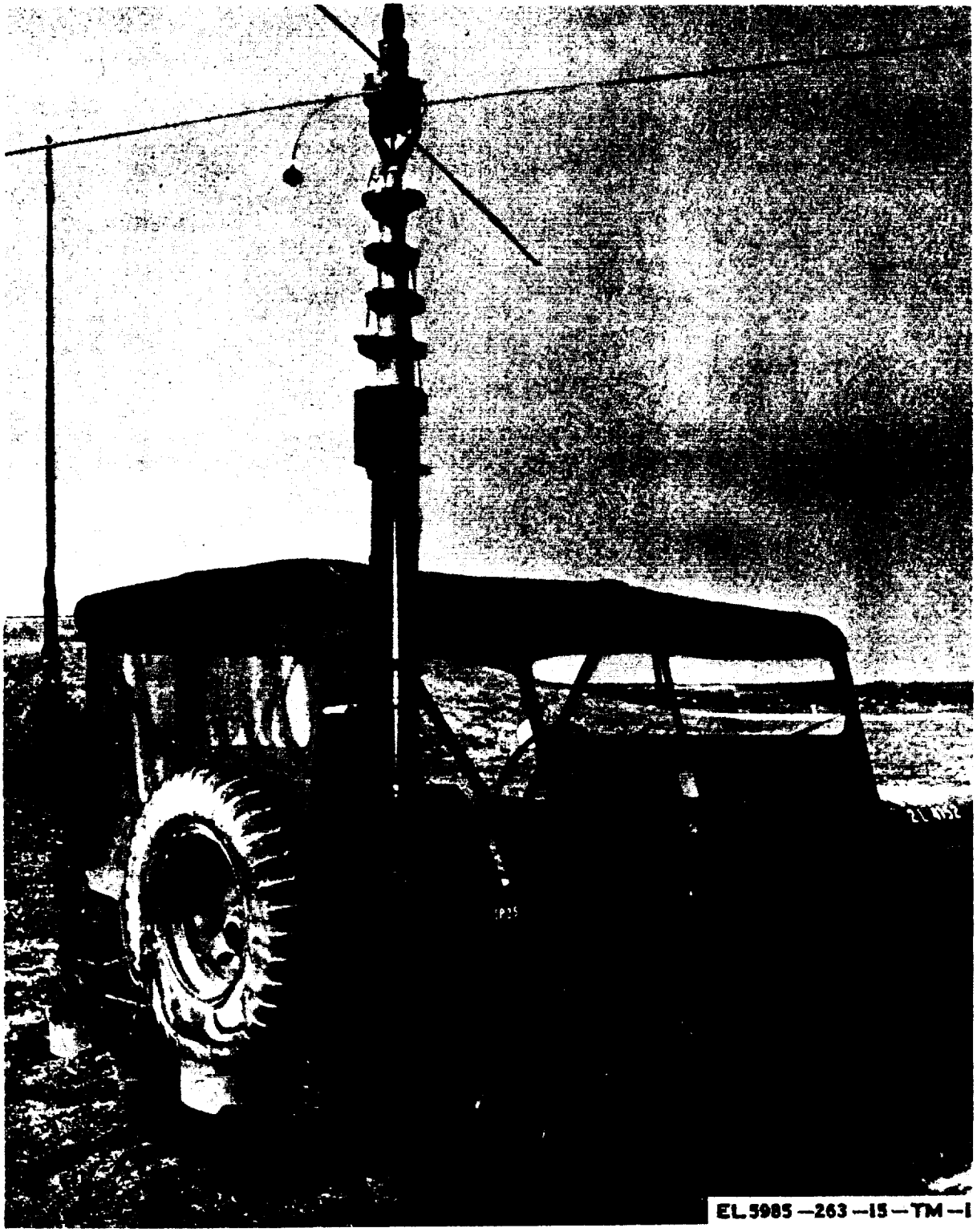

Figure 1-2. Typical vehicular installation of Mast AB-903/G.

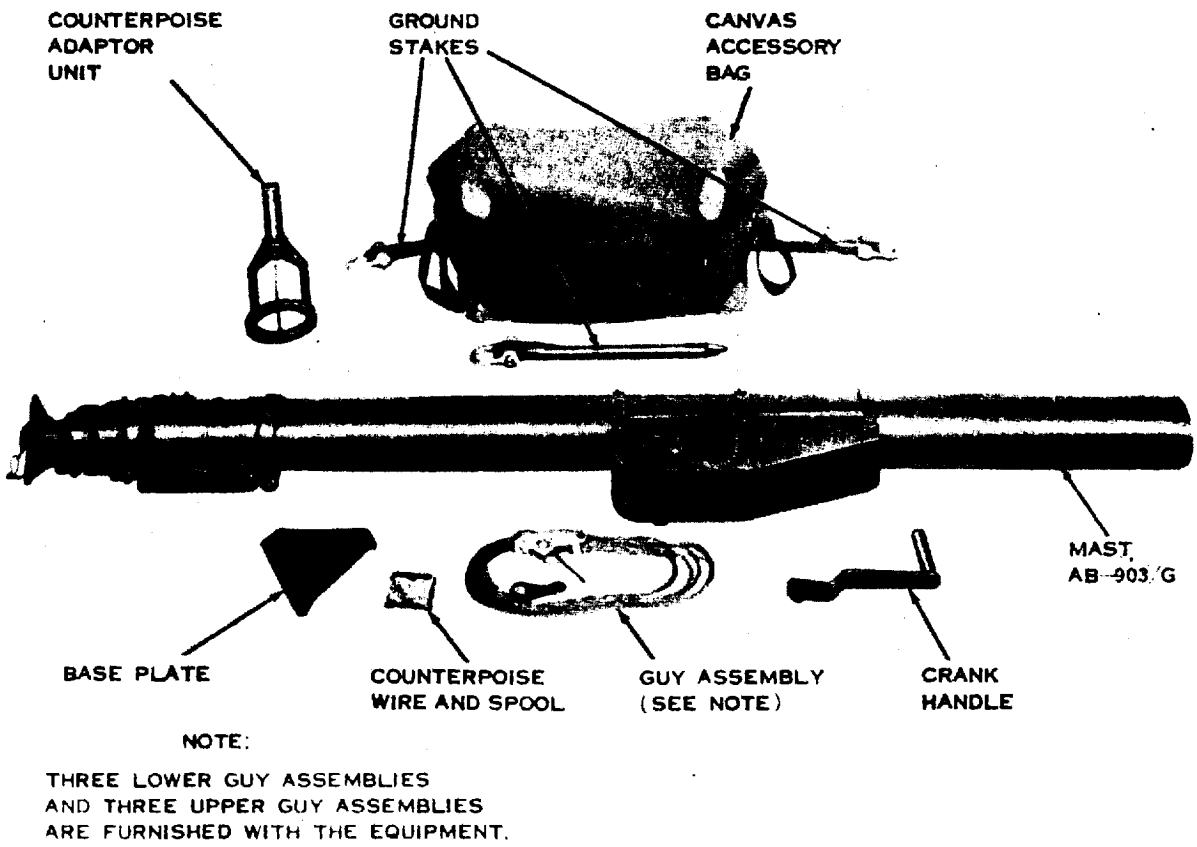

Figure 1-3. Mast AB–903/G and ground-mounting components.

1-9. Additional Equipment Required

The counterpoise adapter unit, required in certain uses with the mast, is also supplied as part if the AB–903/G. Omnidirectional Antenna AS-1729/VRC may be mounted on Mast AB–903/G. To improve the radiation pattern of the antenna, a counterpoise assembly is provided to be attached to the counterpoise adaptor unit. Procedures for assembling the complete counterpoise assembly are discussed in paragraphs 2-8 and 2-9.

1-10. System Application

a. Omnidirectional Usage. The best reception and transmission of signals occur with the greatest height of the antenna. This is particularly true in the very high frequency (vhf) range where signals are restricted by line-of-sight characteristics. Mast AB–903/G is used mainly with vhf radio systems. Its 30-feet extended height increases distance of transmission and reception, except in dense foliage. In dense foliage and jungles, other means must be taken to raise the antenna and the mast above the foliage to achieve efficient signal propagation. Refer to the applicable technical manual for these considerations in system application.

b. Directional Antenna Use. Directional antennas, such as the log periodic type, incorporate design features which increase the distance, range, and strength of most signals. Some of these antennas can be used with the mast, but are limited to a 20-pound masthead load. Antennas in excess of this weight can damage the mast

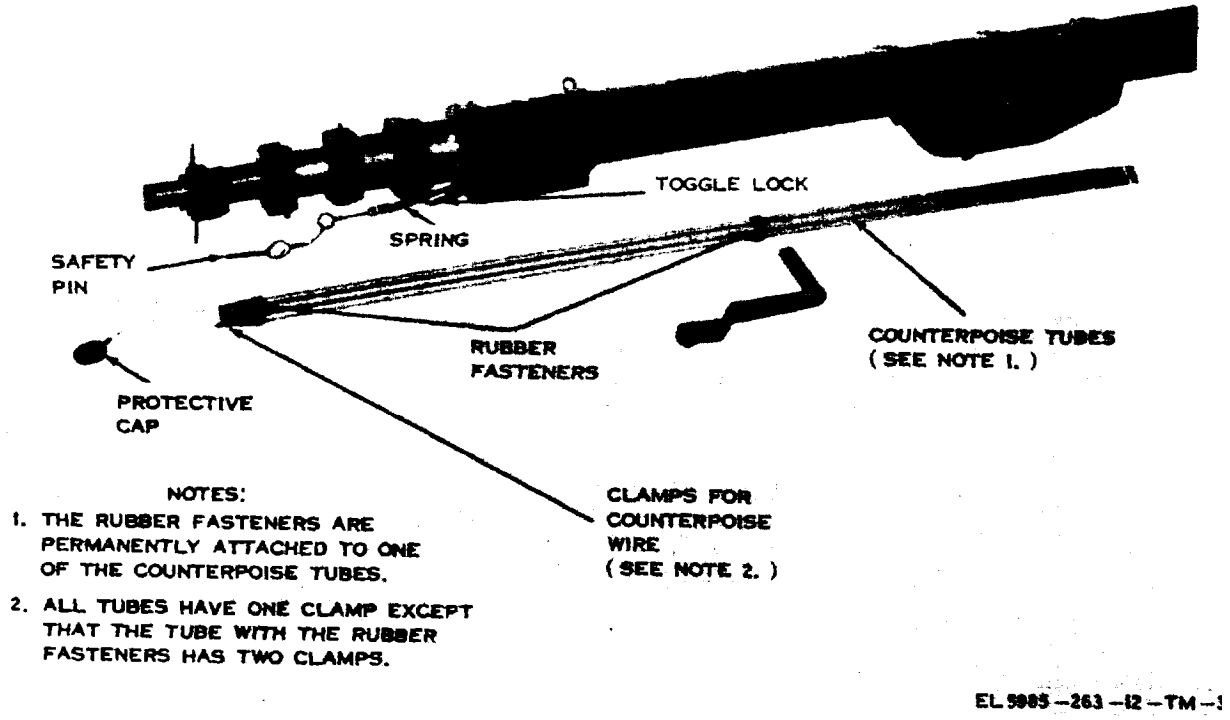

Figure 1-4. Mast AB–903/G, counterpoise assembly, and mast-securing components.

and should not be used. Use of these antennas, coupled with the extended 30-foot height of the mast, permits reception and transmission of signals, particularly in the vhf range, where other antennas of the omnidirectional type can. not be used. This, however, does not reduce the problem when attempting to send or receive signals in densely wooded areas or jungles. Also, the antenna used should be properly aimed in the direction of transmission or reception before raising the mast and the antenna; however, direction can be changed after the mast is erected. Refer to applicable technical manual of the particular radio set for further considerations in system application.

c. Vehicular Use. The mast can be mounted on the following vehicles: M–114 Carrier, M-577 Carrier, M151A1 Truck, M-37 Truck, and M-109 Truck. Each of these vehicles has a designated area for storing the mast during transit when not in use, and a bracket for mounting the mast while in use.

CHAPTER 2

INSTALLATION

WARNING

During installation of this equipment, conform to all safety requirements set forth in TB SIG 291. Injury or death could result from failure to com- with safety practices.

Section I. SERVICE UPON RECEIPT OF EQUIPMENT

2-1. Unpacking

a. Packaging Data. When packed for shipment, the components of Mast AB-903/G are packed in a nailed, wooden box. In the wooden box are two fiberboard boxes: one contains the mast and the other contains the canvas accessory bag in which the ground-mounting components are stored. The counterpoise tube assembly is stored inside the innermost mast section; all other components are found in the accessory bag.

b. Removal of Contents. Perform the procedures given below.

(1) Cut and fold back the metal straps.

CAUTION

Do not pry deeply into the wooden box. Components inside the box may become damaged.

(2) Remove the nails from the top and one side of the box with a nailpuller. Remove the top and one side. Remove both fiberboard boxes.

(3) Open the moistureproof barrier that covers each fiberboard box. Open each box.

(4) Open the moisture-vaporproof barrier inside each fiberboard box. Remove the inner carton. Open the inner carton and remove the contents of both cartons.

2-2. Checking Unpacked Equipment

a. Inspect the mast and accessories for damage incurred during shipment. If the equipment has been damaged, report the damages as prescribed in paragraph 1-3.

b. Check to see that the equipment is complete as listed on the packing slip. Report all discrepancies in accordance with AR 735-11-2. Shortage of a minor assembly or part that does not affect proper functioning of the equipment should not prevent use of the equipment.

c. If the equipment has been used or reconditioned, check to see whether it has been changed by a modification work order (MWO). If the equipment has been modified, the MWO number will appear near the nomenclature plate. Check to see whether the MWO number (if any) and appropriate notations concerning the modification have been entered in the equipment manual.

NOTE

Current MWO's applicable to the equipment are listed in DA Pam 310-7.

Section II. GROUND-MOUNTING INSTALLATION

2-3. Selection of Site

a. Mast AB-903/G may be erected on any site where adequate clearance is available. The antenna, mast, and guy lines must be free from overhead obstructions, such as trees or powerlines.

b. The site selected should have firm soil to hold the guy stakes in place. In areas where the soil is sandy or wet and stakes tend to shift in the soil, small trees or stumps may be used for attachment of the guy lines.

2-4. Orientation of Mast and Antenna

There are no special considerations for orienting the antenna mounted on Mast AB-903/G if the antenna is omnidirectional. A typical antenna, such as Antenna AS-1729/VRC, radiates energy in all directions and is merely attached to the end of the mast as directed. Instructions for mounting the AS-1729/VRC are given in paragraphs 2-8 and 2-9.

2-5. Mast Components for Ground Installation

a. Tools Required. No special tools are required for ground installation of Mast AB-903/G. A hammer is supplied for driving ground stakes into the ground.

b. Components Required. The following components are required for ground installation of Mast AB-903/G:

Quantity	*Item*	*Fig. No.*
1	Mast AB-903/G	1-3
1	Crank handle	1-3
3	Guy assembly, upper	1-3
3	Guy assembly, lower	1-3
1	Base plate	1-3
3	Ground stake	1-3
1	Hammer	1-3

c. Counterpoise Assembly. The complete counterpoise assembly is described in paragraph 2-8. Procedures for assembly of the counterpoise are given in paragraph 2-9.

2-6. Preparation for Mast Setup

a. Remove the components from the canvas accessory bag. Remove the protective cap and counterpoise tubes from the innermost tube of the mast by removing the safety pin (fig. 1-4) and lifting the cap from inside the mast.

b. Before erecting the mast, position the base plate on the mast. Set the base plate (fig. 1-3) firmly on the ground at the desired mast location so that the bent corners dig into the ground.

NOTE

Ground should be as level as possible.

c. Locate the three guy stakes by pacing off approximately 18 feet from the base plate. This distance is the line from mast to the edge of an *imaginary* circle (radius); around this *imaginary* circle, place the stakes 120° apart (one-third of the way around for each stake). Refer to figure 2-1.

NOTE

If the ground is level, and if a radius of 18 feet is used, the distance from one stake to any other stake will be between 31 and 32 feet. This provides a rule of thumb to see if the stakes are spaced equally apart.

d. Drive each of the stakes into the ground at approximately a 60° angle (that is, 60° facing away from the mast) (fig. 2-1). Insure that the hook on the ground stake is facing toward the base plate.

NOTE

In *e, f,* and *g* below, mast may be either erected, lying down, or supported at any angle in between these extremes.

e. Release the toggle lock (fig. 1-4) that holds the telescopic mast sections together during transit. (The safety pin from the top mast section has already been removed). Lift off the restraining spring from the toggle lock attachment extension (fig. 5-4).

f. Uncoil the three lower guy ropes. Attach the hook to the lower guy attachment ring on the mast. Attach the other end to the hook on the stake. DO NOT tighten the guys at this time.

g. Uncoil the three upper guy ropes. Attach the hook to the upper guy attachment plate and let the other end hang loose. DO NOT fasten guys to stakes or attempt to tighten guys at this time.

2-7. Erecting Mast

CAUTION

Be careful that counterpoise and antenna elements do not injure personnel. Counterpoise tubes and antenna elements have sharp points and could cause serious personal injuries.

a. Insure that the applicable antenna assembly is dated correctly on the mast before raising the entire mast assembly on the base plate. The mast may be placed into position first; then, place the antenna assembly on the mast as required. Antenna adaptor is locked to the masthead with the securing pin.

b. Be sure that the mast is on the base plate so that the square hole in the bottom of the mast (fig. 2-2) engages the square projection on the base plate (fig. 1 -2). Be sure that the mast is held vertically; use any necessary manpower until the lower guy ropes are secured to keep the mast erect.

c. Gradually tighten the *lower* guy ropes by sliding the rope snubbers until the mast is vertical. The lower guy plate is shown in figure 5-4.

NOTE

Mast must not be tilted more than 7° to avoid excessive loading on the fully raised mast sections.

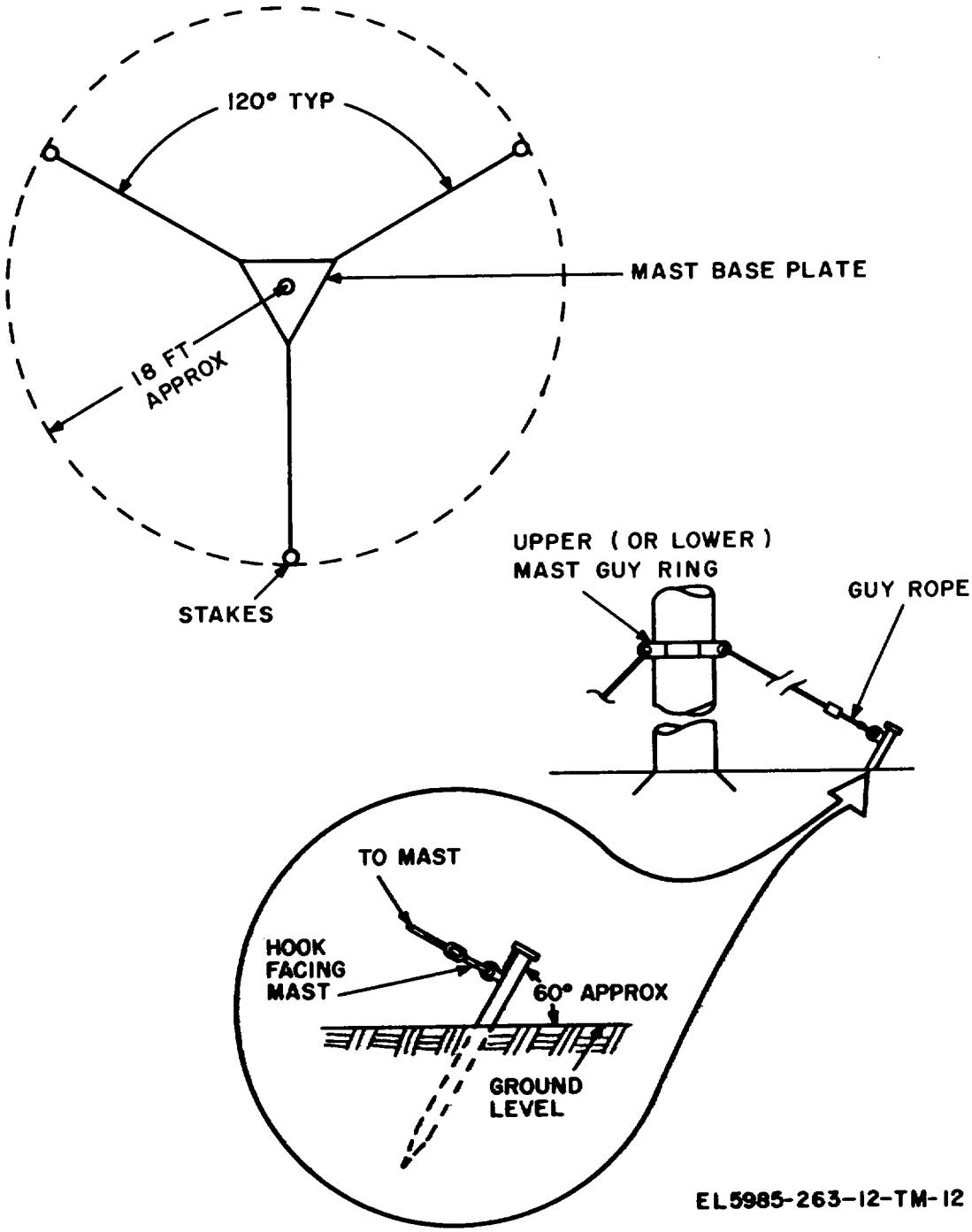

Figure 2-1. Stake-plotting plan, ground installation Mast AB-903/G.

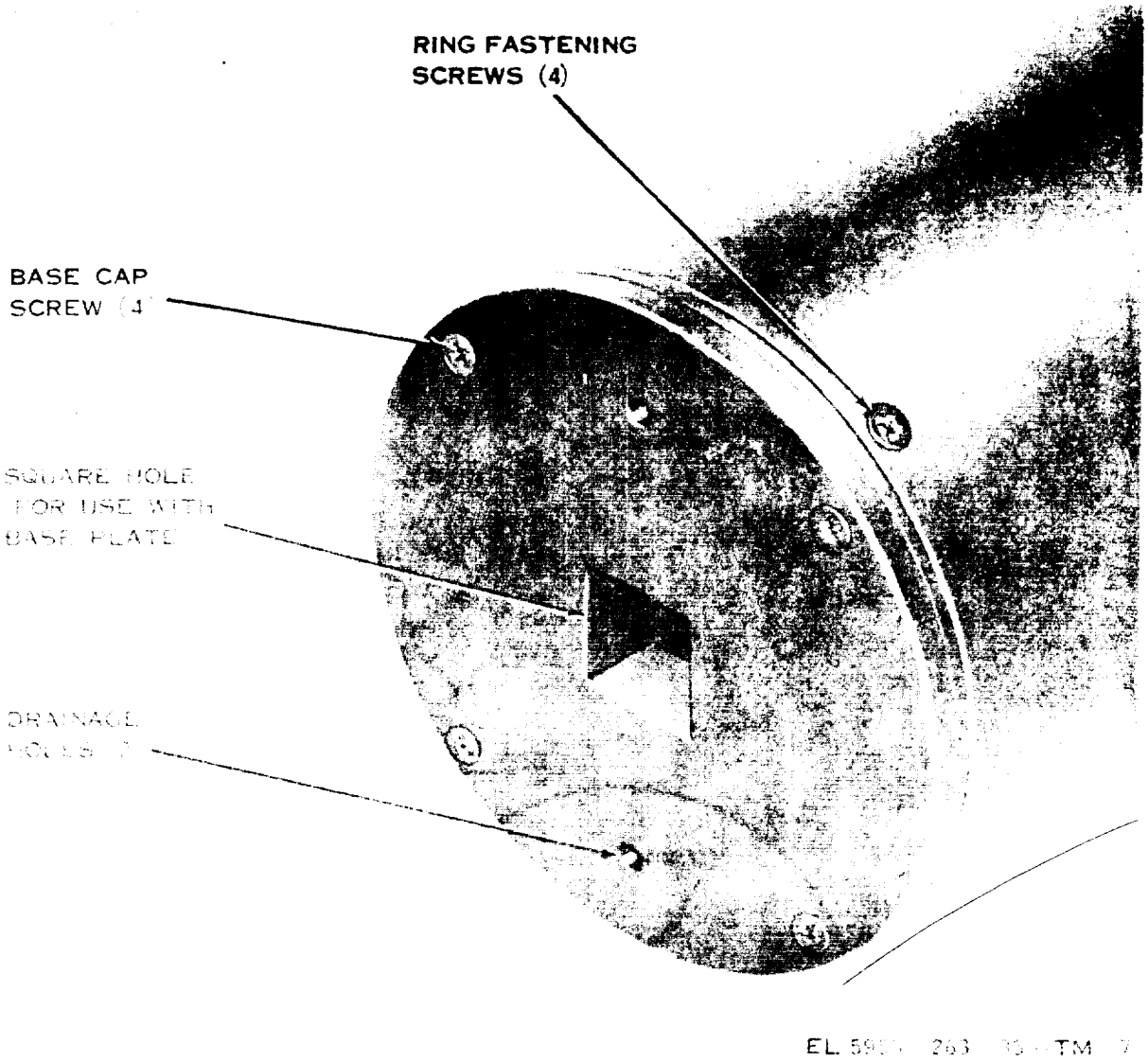

Figure 2-2. Mast AB-903/G, bottom plate (base cap).

d. The mast is not designed to be raised or lowered if winds are in excess of 35 miles per hour. If the mast is raised or lowered during windy periods, protect the mast by insuring that the upper and lower guy lines are held snug. This can be done by handholding the upper lines as the mast is raised.

e. After the mast has been raised as described in paragraph 3–2, insure that the upper guys are secure by sliding the rope snubbers; make sure that the mast is vertically straight. The upper guy plate is shown in figure 3–2.

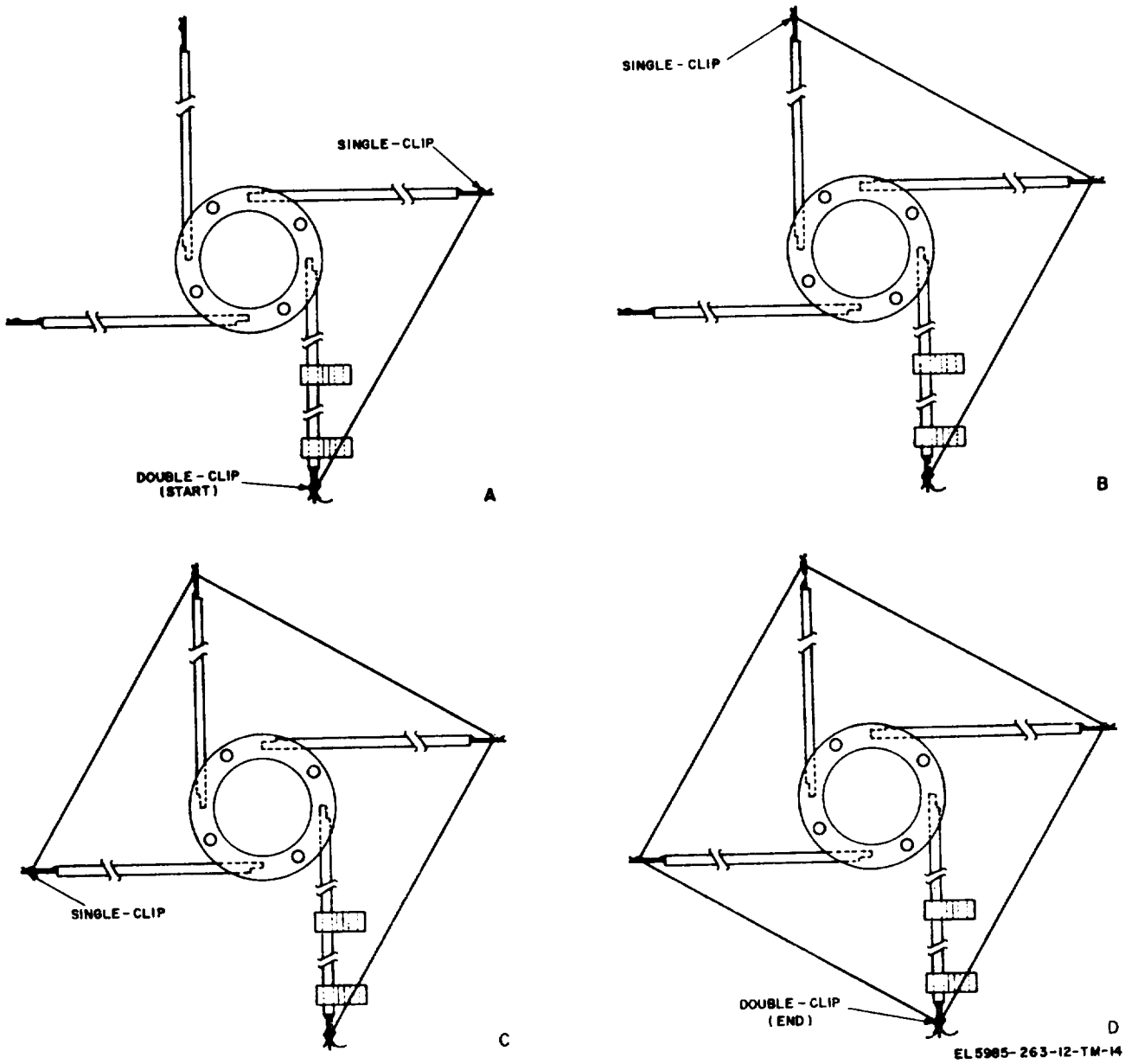

Figure 2-3. Counterpoise tubes and wires, assembly procedures.

Section III. COUNTERPOISE ASSEMBLY AND ANTENNA AS-1729/VRC

2-8. General

(figs. 2-3 and 2-4)

Mast AB–903/G is shipped with counterpoise adapter unit and counterpoise tube assembly to allow use with Antenna AS-1729/VRC. Antennas to be used with Mast AB–903/G have their own mounts which are issued as a part of the antenna. This section has been prepared to provide information for assembly of units using a counterpoise adapter unit and counterpoise tube assembly. The complete counterpoise assembly consists of the following items.

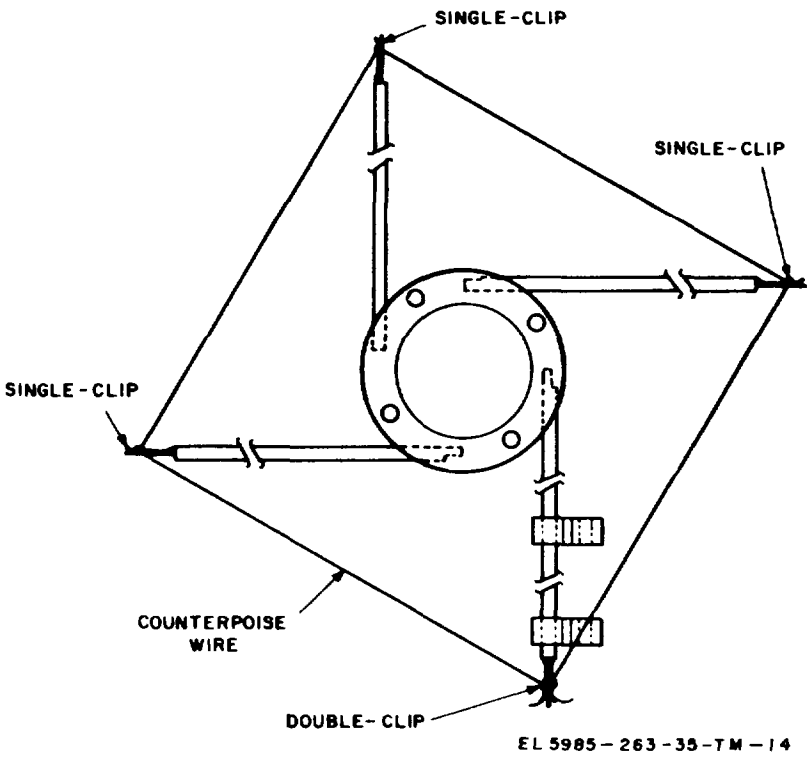

Figure 2-4. Diagram of complete counterpoise assembly, top view.

Quantity	Item	References
1	Counter poise adaptor unit	Fig. 1-3
3	Counterpoise tube (w/o rubber fasteners).	Fig. 1-4
1	Counterpoise tube (w/rubber fasteners).	Fig. 1-4
1	Counterpoise wire	Fig. 1-3
1	Antenna AS-1729/VRC.	

2–9. Assembly of Counterpoise Tubes on Antenna Adapter

NOTE

The counterpoise adaptor unit is specifically designed so that Matching Unit Base MX–6707/VRC, part of Antenna AS-1729/VRC, may be attached to the counterpoise adaptor unit. If any other type of antenna is to be mounted on Mast AB–903/G, refer to the applicable technical manual.

CAUTION

Do not overtighten bolts; damage to components may result.

a. Attach Mounting Unit Base MX–6707/VRC to the counterpoise adaptor unit (figs, 1–3 and 5-5) with the two bolts screwed into the holes provided for this purpose.

b. Remove and separate the four counterpoise tubes stored in the mast. Two rubber fasteners will remain attached to one of the tubes which has a double clip at one end. Each of the three remaining tubes has a single clip. Insert the blunt end of each tube into each of the four sockets in the counterpoise adaptor unit. The counterpoise tubes will automatically snap into position.

CAUTION

Overtightening of the counterpoise wire can bend the tubes.

c. Remove the counterpoise wire from the accessory bag. Insert the counterpoise cable into one clip of the tube that has a double clip (fig. 2-3). Run the cable to the nearest tube that has a single clip. Insert the cable into the single clip; make sure that the counterpoise wire is taut.

d. Continue looping the counterpoise wire around the single clips of the remaining sections (B, and C, fig. 2-3) until the cable terminates

at the double clip counterpoise tube (D, fig. 2-3). Refer to figure 2–4 for a diagram of the completed assembly. Place the counterpoise securing tape in the canvas bag for safekeeping.

e. Screw Antenna Element AT–1095/VRC into Antenna Element AS-1730/VRC. Hold the counterpoise assembly with Matching Unit Base MX–6707/VRC attached and place the threaded end of the AS-1730/VRC into the matching base; turn until secure. Insert the completed assembly into the top mast section. Refer to TM11–5985–262–15 for correct antenna cable connections. The antenna can be raised into position by cranking the mast to the desired extended position after connecting the applicable cables. Use cable grip PF–211/G to support the cables.

CHAPTER 3

OPERATION

WARNING

Before operating this equipment, make sure that all requirements of TB SIG 291 are met. Injury or DEATH could result from improper or careless operation.

3-1. General

a. This chapter covers only items used by the operator.

b. Mast AB-903/G is raised (or lowered) by using a handcrank. See figure 3-1.

c. DO NOT raise the mast unless the following procedures are taken:

(1) Antenna adapter is secured to the mast with the stop pin (fig. 5-4).

(2) The safety (securing) pin (fig. 1-4) has been removed from the innermost (top) section of the mast assembly.

(3) Loop of wire above the spring connected to the toggle lock (fig. 1–4) has been removed from the toggle lock attachment extension (fig. 5-4).

d. Be sure that the lower guy ropes are reasonably taut; allow the top guys to remain slack. The mast should not be out of the vertical position by more than 7°. If guyed, the mast can withstand winds of 50 miles per hour. Use of the mast beyond these wind conditions can damage it.

3–2. Operating Instructions

a. Attach the crank handle assembly to the square shaft extending from the winch assembly.

NOTE

The square shaft is double-ended, extending completely through the winch assembly. Select the shaft end with the groove and yellow circular arrow on the winch case indicating UP or DOWN.

b. Lock the handle to the shaft with the handle lock by sliding the retainer clip sideways to secure it.

CAUTION

Be sure the locking pin (fig. 3-1) is loosened.

c. Pull the locking pin straight out, twist it one-quarter turn (90°), and place it back into position. The pin is now disengaged from the winch assembly gears, and the crank handle may now be rotated.

d. To raise the mast, turn the handle clockwise. To lower the mast, turn the handle counterclockwise. The yellow circular arrow indicates direction of motion.

e. Approximately 54 turns of the crank handle are required to fully raise (or fully lower) the mast.

f. To lock the mast in any position, pull the locking pin straight out, twist it one-quarter turn (90°), and seat it. It may be necessary to turn the crank handle slightly so that the locking pin drops smoothly into position to insure that the mast is firmly locked.

g. Insure that all guy ropes are securely fastened by following the procedures given in paragraph 2–7.

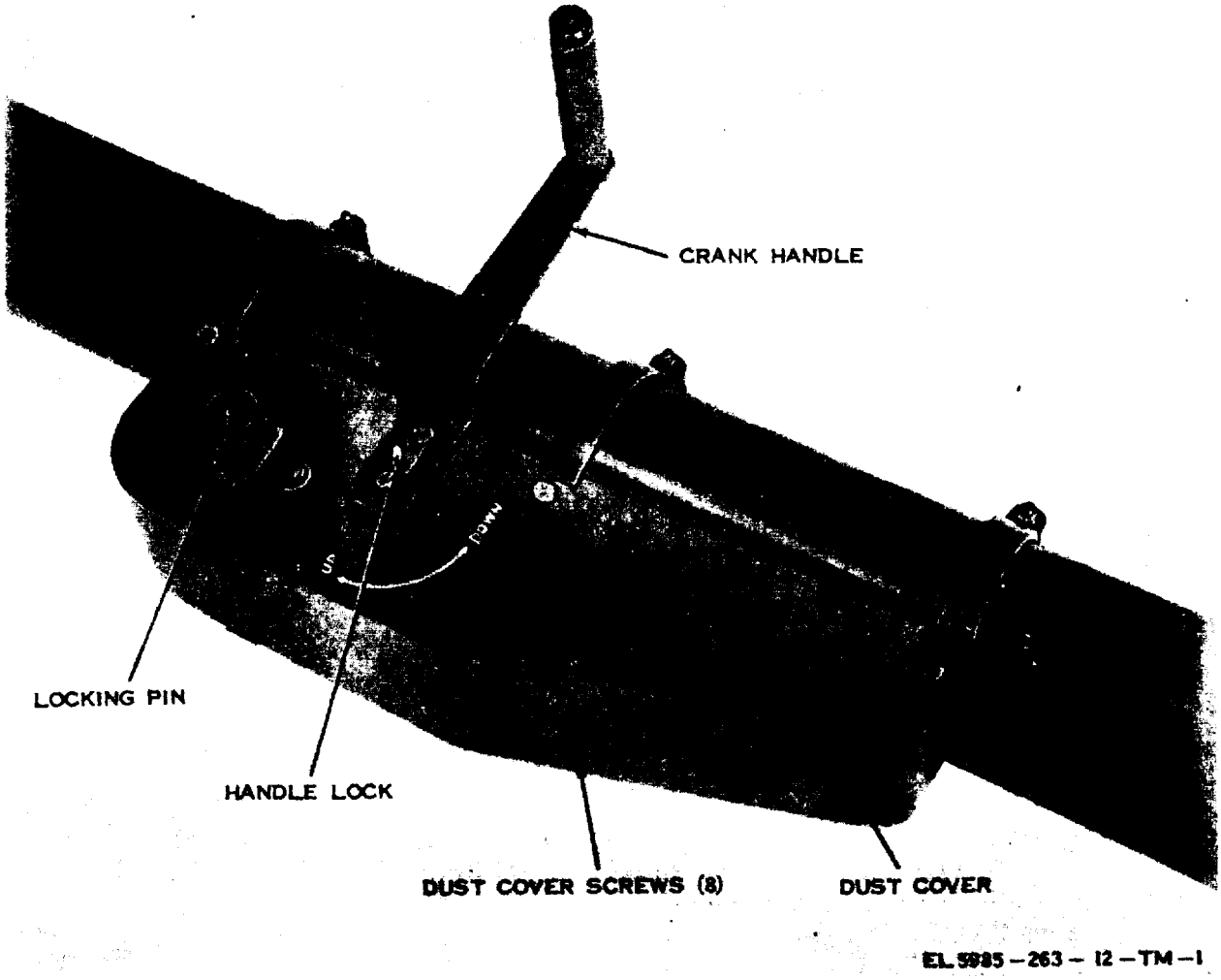

Figure 3–1. Mast AB–903/G, winch assembly, crank handle attached.

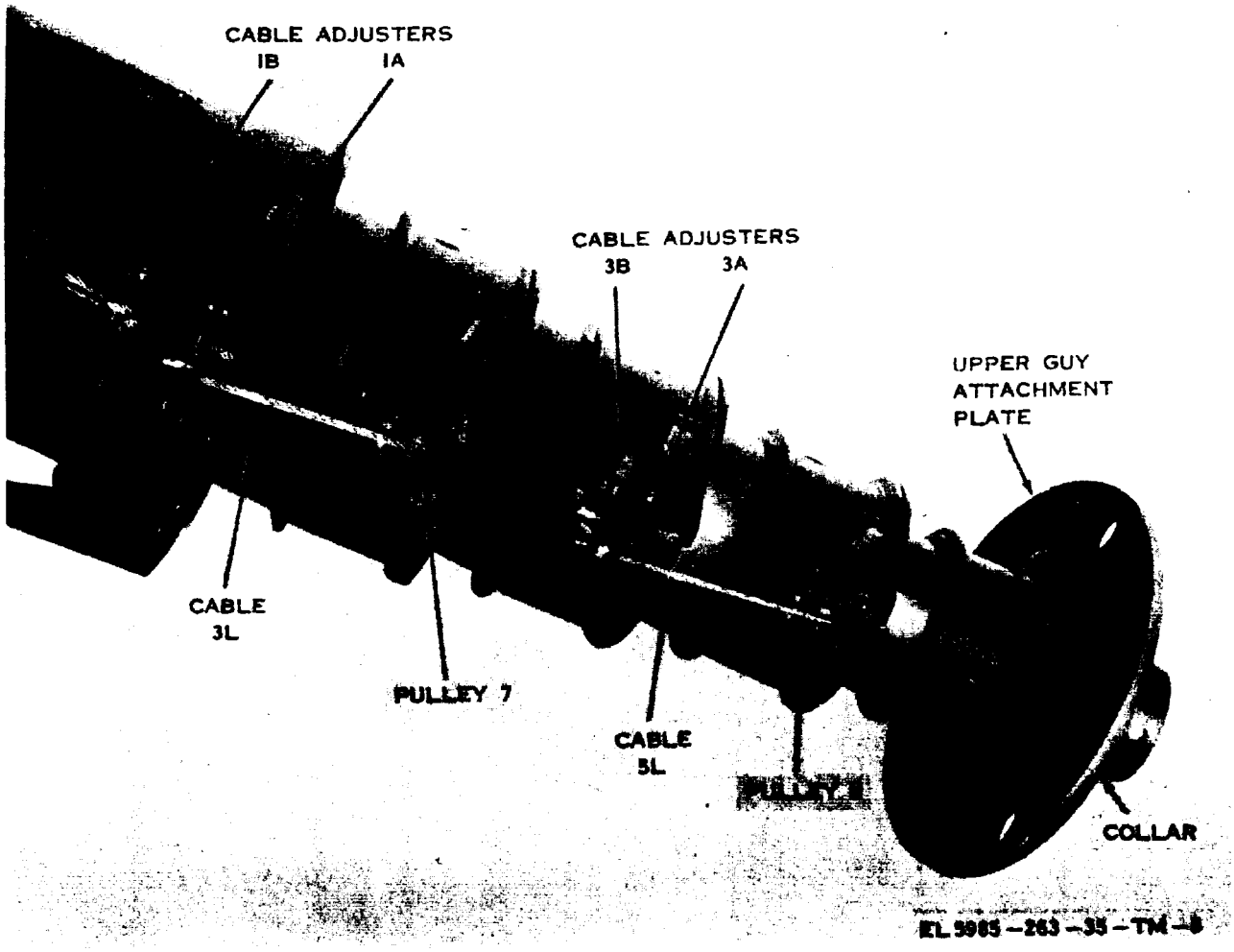

Figure 3-2. Mast AB-903/G, upper section view.

CHAPTER 4

OPERATOR AND ORGANIZATIONAL MAINTENANCE

WARNING

During removal, disassembly, erection, assembly, or repair of the mast, conform to all safety requirements of TB SIG 291. Injury or DEATH could result from failure to comply with safe practices.

Section 1. OPERATOR'S MAINTENANCE

4-1. Scope of Operator's Maintenance

The maintenance duties assigned to the operator of Mast AB–903/G are listed below together with reference to the paragraphs covering the specific maintenance function. The duties assigned do not require tools or test equipment other than those listed in paragraph 4-2.

a. Daily preventive maintenance checks and services (para 4-6).

b. Cleaning (para 4-6).

4-2. Tools and Equipment Required

Two adjustable wrenches (FSN 6120-264-3795) and a screwdriver (FSN 5120-276-1272) are required. The following materials are also required:

a. Soft-bristled brush.

b. Trichloroethane.

c. Lintfree cleaning cloth.

4-3. Operator's Preventive Maintenance

Preventive maintenance is the systematic care, servicing, and inspection of equipment to prevent the occurrence of trouble, to reduce downtime, and to assure that the equipment is serviceable.

a. Systematic Care. The procedures given cover routine systematic care and cleaning essential to proper upkeep of this equipment when it is used separately. When this equipment is used as part of a set or system, follow the procedures established in the set or system manual.

b. Preventive Maintenance Checks and Services. The preventive maintenance checks and services charts outline functions to be performed at specific intervals; however, if the equipment is used as part of a set or system, follow the procedures established in the set or system manual. For equipments operated separately, these checks and services are to maintain Army electronic equipment in a combat-serviceable condition; that is, in good general (physical) condition and in good operating condition. To assist operators in maintaining combat serviceability, the chart indicates what to check, how to check, and the normal conditions; the *References* column lists the illustrations, paragraphs, or manuals that contain detailed repair or replace ment procedures. If the defect cannot be remedied by the operator, higher category of maintenance or repair is required. Records and reports of these checks and services must be made in accordance with the requirements set forth in TM 36-750.

4-4. Operator's Preventive Maintenance Checks and Service Periods

a. Preventive maintenance checks and services of the AB-903/G are required daily and weekly. The lightweight, cable-driven mast and its associated parts require these maintenance inspections to detect and correct damage caused by continued exposure of the mast to the elements. The maintenance services are of the utmost importance. Failure of any one of the mast sections or cables may cause complete failure of the mast with resultant damage to equipment and possible injury to personnel. Excessive dampness, salt spray, snow, ice, continuous heat, and rapid changes in temperature may cause corrosion of the aluminum and magnesium components and blistering or peeling of the paint on the mast and its components. High winds may cause the guy anchors to creep in the soil and the guy lines to slacken. In cold climates, heavy coatings of ice or an accumulation of snow may overload

the mast and strain the guy. Also, dirt and corrosion may clog the drain holes in the base plate, and water will accumulate in the lower mast tube section which may cause the mast sections to burst when the water freezes and changes to ice.

b. Paragraph 4-5 specifies checks and services that must be accomplished daily or under the special conditions listed below.

(1) *Fixed installation.*

(a) When equipment is initially installed.

(b) When equipment is reinstalled after removal for any reason.

(c) During severe weather conditions.

(d) At least once each week if the equipment is maintained in a standby condition.

(2) *Vehicular installation.*

(a) Before the vehicle starts on a mission.

(b) When equipment is initially installed.

(c) When equipment is reinstalled after removal for any reason.

(d) At least once each week if the equipment is maintained in a standby condition.

4-5. Operator's Daily Preventive Maintenance Checks and Services Chart

Sequence No.	Item to be inspected	Procdures	References
1	Mast assembly	Check the general condition and completeness for carrying case, spare parts, and mounting brackets.	Para 1-6 and fig. 1-3.
		Clean all exterior surfaces	Para 4-6.
2	Guy lines and stakes	Check guy lines and stakes to see that they are secure. Remove any ice accumulation on guy lines.	Para 2-6.
3	Mast base cap	Check area around plate for proper drainage. If the soil is worn away, add fill dirt and dig drainage ditches to guide water away.	Para 2-6 and fig. 2-2.
4	Base drain holes (bottom of mast).	Inspect holes for water drainage	Para 4–6 and fig. 2-2.
5	Dust cover brackets	Inspect accessible items, bolts, and attaching screws for looseness.	Fig. 3-1.

4-6. Cleaning

WARNING

The fumes of trichloroethane are toxic. Provide thorough ventilation when used. DO NOT use near an open flame. Trichloroethane is not flammable, but exposure of fumes to an open flame converts the flames to highly toxic, dangerous gases.

The working parts of the mast must be kept clean. Remove dust and dirt with a clean cloth. Remove grease, fungus, and ground-in dirt with a cloth dampened (not wet) with trichloroethane. Check drainage holes at the bottom of mast (fig. 2-2). If dirt or sand is present, remove all loose external dirt with a dry cloth. If this procedure does not clear the drain holes, refer the mast to higher category of maintenance. Be careful when cleaning holes if they are plugged shut; severe damage to cables and pulleys may result at the base of the mast.

Section II. ORGANIZATIONAL MAINTENANCE

4-7. Scope of Organizational Maintenance

a. This section contains instructions covering organizational maintenance of Mast AB–903/G. It includes instructions for performing preventive and periodic maintenance services and repair functions to be accomplished by the organizational repairman.

b. Organizational maintenance of Mast AB–903/G includes—

(1) Tools and equipment required (para 4-8).

(2) Organizational preventive maintenance (para 4-9).

(3) Monthly preventive maintenance checks and services chart (para 4–11).

(4) Quarterly preventive maintenance checks and services chart (para 4-13).

4-8. Tools and Materials Required

A list of parts authorized for organizational maintenance appears in appendix D. The tools and materials required for organizational maintenance are listed below.

a. Tools. Adjustable wrench (FSN 5120–264–3795), and screwdriver (FSN 5120–278-1272).

b. Materials.

(1) Trichloroethane.

(2) Lintfree cleaning cloth.

(3) Soft-bristled brush.

c. Test Equipment. None required.

4–9. Organizational Preventive Maintenance

a. Preventive maintenance is the systematic care, inspection, and servicing of equipment to maintain it in serviceable condition, prevent breakdowns, and assure maximum operational capability. Preventive maintenance is the responsibility of all categories concerned with the equipment and includes the inspection, testing, and repair or replacement of parts, subassemblies, or units that inspection and tests indicate would probably fail before the next scheduled, periodic service. Preventive maintenance checks and services of Mast AB–903/G at the organizational maintenance category are made monthly and quarterly unless otherwise directed by the commanding officer. The preventive maintenance checks and services should be scheduled concurrently with the periodic service schedule of the carrying vehicle for all vehicular installations.

b. Maintenance forms and records to be used and maintained on this equipment are specified in TM 38–750.

4-10. Organizational Monthly Maintenance

Perform the maintenance functions indicated in the monthly preventive maintenance checks and services chart (para 4–13) once each month. A month is defined as approximately 30 calendar days of four operations (up and down) daily. If the equipment is operated 8 times a day (up and down), the monthly preventive maintenance checks and services should be performed at 15-day intervals. Adjustment of the maintenance interval must be made to compensate for an unusual operating conditions. Equipment maintained in a standby (ready for immediate operation) condition must have monthly preventive maintenance checks and services performed on it. Equipment in limited storage (requires service before operation) does not require monthly preventive maintenance.

4-11. Organizational Monthly Preventive Maintenance Checks and Services Chart

Sequence No.	Item to be inspected	Procedure	References
1	Winch assembly	Check cable windings to see that they are even and not overlapped.	Fig. 5-2.
2	Cable drive pulleys	Check for freedom of movement. Check to see that shaft retaining rings are secure and not missing.	Figs. 3-2 and 5-2.
3	Mast tube sections	Clean sliding area of tube sections when dirt or corrosion is evident.	Para 4-6.
4	Painted surfaces	Touch up scratched and chipped spots with paint.	

4-12. Organizational Quarterly Maintenance

Quarterly preventive maintenance checks and services on Mast AB–903/G are required. Periodic monthly services constitute a part of the quarterly preventive maintenance checks and services and must be performed concurrently. All deficiencies or shortcomings will be recorded in accordance with the requirements of TM 38-750. Perform all the checks and services listed in the quarterly preventive maintenance checks and services chart (par 4–13) in the sequence listed.

4-13. Organizational Quarterly Preventive Maintenance Checks and Services Chart

Sequence No.	Item to he inspected	Procedure	References
1	Completeness	See that the equipment is complete	App. B.
2	Installation	Check to see that equipment is properly installed.	Paras. 2-3 through 2-7.

Sequence No.	Item to be inspected	Procedure	References
3	Cleanliness	See that the equipment is clean	Para 4-6.
4	Preservation	Check all surfaces for evidence of fungus and corrosion.	Para 4-6.
5	Publications	Check to see that all publications are complete, serviceable, and current.	DA Pam 310-4.
6	Modifications	Check DA Pam 310–7 to determine if new applicable MWO's have been published. All URGENT MWO's must be applied immediately. All NORMAL MWO's must be scheduled.	TM 36-750 and DA Pam 310-7.
7	Mast operation	Check operation of mast by raising and lowering.	Para 3-2.
8	Winch brakes	Raise mast. When stopped, mast will remain stationary at any height.	If in need of adjustment, higher category of maintenance is required.
9	Winch assembly	Mast raises and lowers evenly	If in need of adjustment, higher category of maintenance is required.
10	Cable drive pulleys	Check for freedom of movement. Check to see that shaft retaining rings are secure and not missing.	None.
11	Mast tube sections	Remove antenna, and lay mast on bench or table. Extend mast and inspect all sections for dirt, sand, or corrosion. Clean as required.	Para 4-6.
12	Cables	Check cables for proper tension— *a.* Unequal distances between sections of retracted mast (fig. 5-8) indicate need for adjustment and tensioning. *b.* If No. 2 lift cable (in gearbox) can be pulled out to a point where it touches spacer bar, tensioning is required.	Refer to higher category of maintenance.

CHAPTER 5

MECHANICAL FUNCTIONING OF MAST AB-903/G

5-1. General

Cables and pulleys are used to transfer energy from a handdriven source to a mechanical load. Knowledge of the principles used in elevating and retracting the mast will aid maintenance personnel in servicing the mast at the direct support, general support and depot maintenance categories.

5–2. Description of Components

The mast consists of six mast sections: tube assembly No. 1 through tube assembly No. 6. Tube assembly No. 1 remains fixed, while all the other tube assemblies telescope into each other as shown in figure 5-1.

a. Tube assembly No. 1 contains the winch assembly (fig. 5–2) with its own gears and pulleys, winch brake, four additional pulleys used with cables 2L and 2R, and three cable adjusters. A view of cable adjuster 1C is shown in figure 5–3; this adjustment is at the bottom of tube assembly No. 2 inside the base cap.

Figure 5–1. Mast AB–903/G cabling and pulley diagram.
Located in back of manual.

b. With the exception of diameter and a few other dimensions, tube assemblies No. 2 through 5 are identical. Each assembly has two pulleys, one of which is visible while the other is hidden from outside view at the base of each tube assembly. Pulleys 5 and 6 are shown in figure 5-3; with the mast retracted and the base cap removed, the pulleys are easily seen. One of these attached to tube assembly No. 2.

c. Tube assemblies Nos. 2, 3, and 4 also have cable adjusters which must be adjusted during the alignment procedure discussed in paragraph 7-6. These are shown in figure 5-1 as adjusters 2A, 2B, 3A, 3B, 4A, and 4B. They are also shown in figures 3-2 and 5-4. Cable adjusters 1A, 1B, and 3B are shown in figure 3-2, and cable adjusters 2A, 2B, 4A, and 4B are shown in figure 5-4.

d. Tube assembly No. 6 has the smallest diameter, moves the fastest, and is the section to which the applicable antenna is attached. The maximum antenna weight, including the mount, which may be attached to this smallest diameter section, is 20 pounds. Each antenna has its own matching mount which permits the antenna to remain attached to the mast. In the case of Antenna AS–1729/VRC, a counterpoise adaptor unit (fig. 1–3) acts as the antenna mount. In figures 5-5 and 5-6, Matching Unit-Base MX-6707/VRC is shown inserted in the counterpoise adaptor unit ready for assembly. For installation and mounting of the counterpoise adaptor unit and Antenna AS–1729/VRC, refer to paragraphs 2–4, 2–6, 2–8, and 2–9. For information on other antennas and mounts, refer to the applicable technical manual.

e. The winch assembly (fig. 5-2) contains the following items:

(1) Brake assembly, consisting of brakeshoe, brakeshoe mounting frame, and one-way clutch. The clutch is fixed to the crank handle shaft.

(2) The cable drum to which cables 2L and 2R are attached.

(3) An idler shaft which has a small gear at one end connected to the cable drum, and a large gear at the other end connected to the crank handle shaft. The large gear has holes drilled in it to accept the locking pin.

(4) The locking pin is used to prevent motion of the mast when the mast is handcranked to the correct height. The locking pin fits into any of several holes in the larger idler gear.

f. The crank handle (fig. 3-1) fits onto the end of the crank handle shaft. The handle lock must be closed to secure the handle to the brake assembly during operation. The locking pin is loosened by pulling it straight out, twisting it 90°, and resetting it in the raised position.

g. Other features of the mast are as follows:

(1) When the mast is fully extended, the

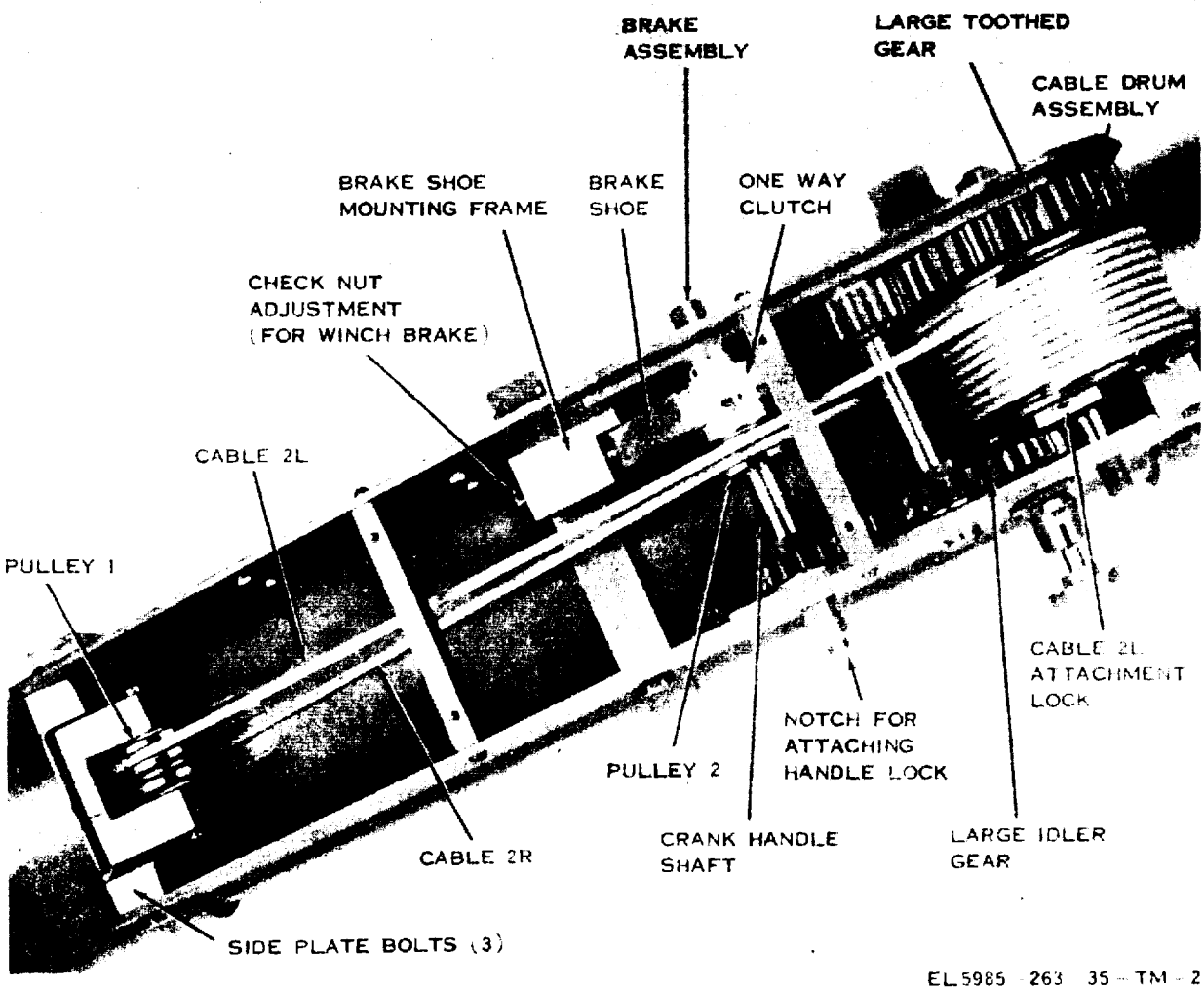

Figure 5-2. Mast AB–903/G, winch assembly, mounted on tube assembly No. 1.

stop pin (fig. 5–4) prevents the mast from moving beyond its maximum limit.

(2) The drainage holes in the base of the mast (fig. 2–2), must be clear at all times to prevent accumulation of water in tube assembly No. 1 with resultant corrosion and damage. If accumulated water freezes, expanding pressure can damage the mast.

(3) Three vertical holes at the lower end of tube assembly No. 2 indicate maximum height.

5-3. Brake Assembly

The brake assembly includes a one-directional clutch and brakeshoe to prevent lowering of the mast by its own weight and the weight of the antenna. The one-directional clutch permits free operation during erection of the mast and is engaged when holding or lowering the mast. The brakeshoe is spring-loaded to compensate for wear.

5-4. Cable Assemblies

The upward motion of the mast is described below.

a. As viewed from the handcrank side of the winch assembly, turning the handcrank in the clockwise direction causes the cable drum to pull cable 2L around the drum, and allows cable 2R to pay out slack cable and raise tube assembly No. 2.

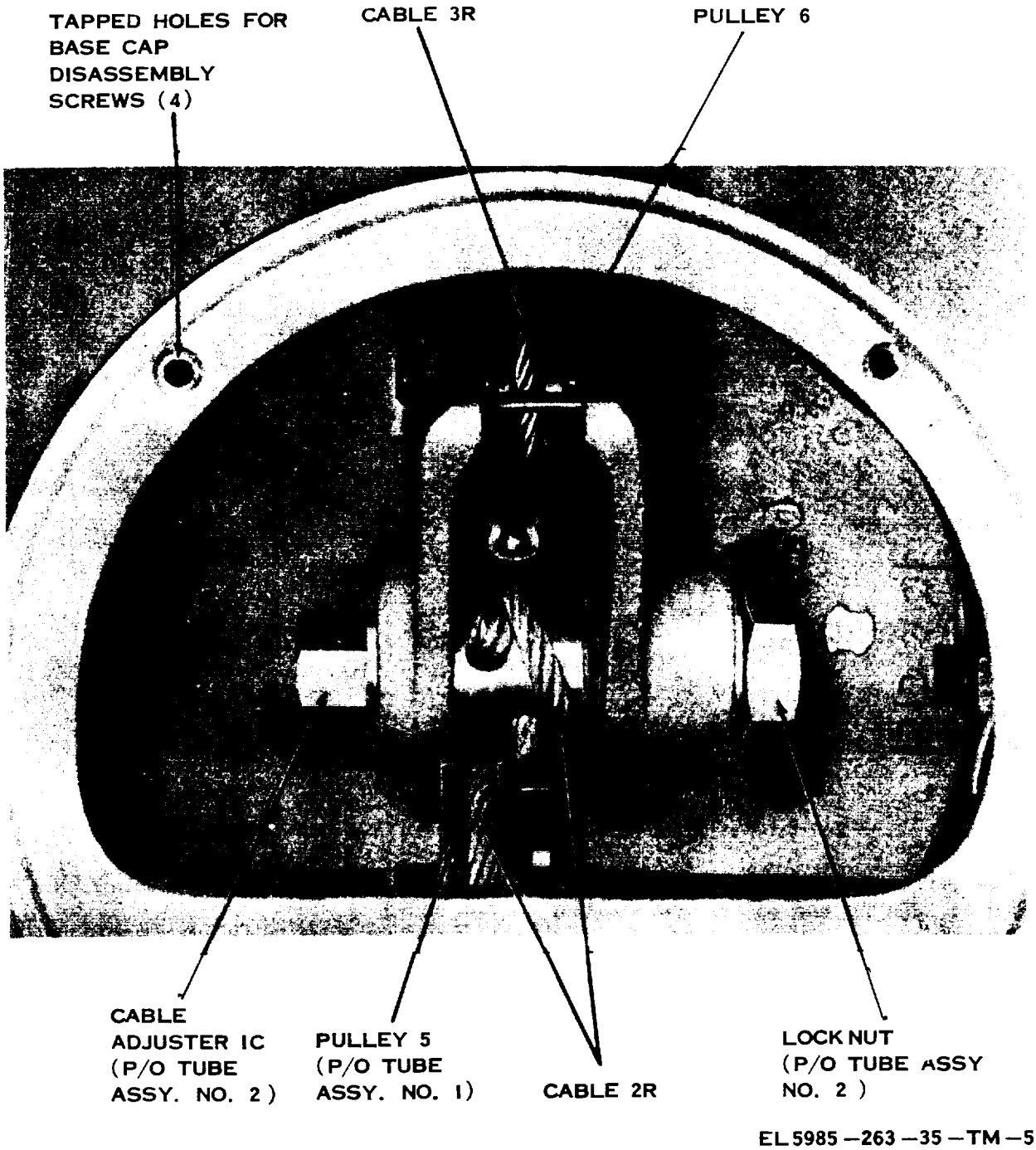

EL 5985 —263 —35 —TM —5

Figure 5-3. Mast AB-903/G, cable adjuster 1C, bottom of tube assembly No. 1 base cap removed.

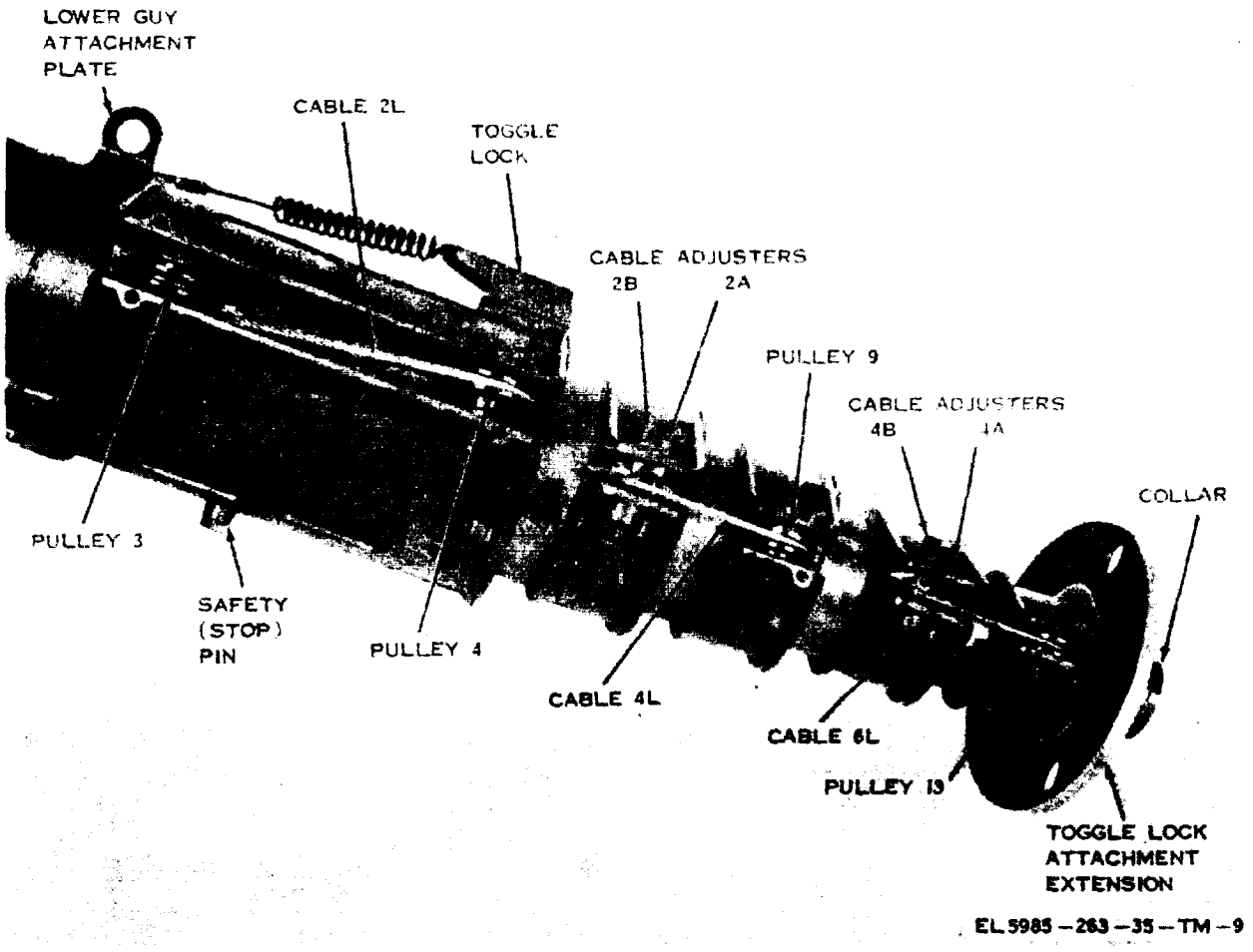

Figure 5-4. Mast AB-903/G, winch assembly side view, dust covers removed.

b. As tube assembly No. 2 rises, tension is applied to cable 3L and causes tube assembly No. 3 to rise.

c. As a result of the motion of tube assembly No. 3, tension is exerted on cable 4L, causing tube assembly No. 4 to rise in a similar way.

d. The sequence continues. Tube assembly No. 4 causes tube assembly No. 5 to rise because of tension on cable 5L, and tube assembly No. 5 causes tube assembly No. 6 to move as a result of tension on cable 6L.

e. Approximately 54-66 turns of the crank handle are needed to fully erect the mast. When the mast has reached its full height, the stop pin (fig. 5-4) contacts the outer ring at the base of tube assembly No. 2, stopping tube assembly No. 2. This, in turn, stops all other mast sections since they cannot move if tube assembly No. 2 has been halted.

f. At times, it may not be necessary to raise the mast to its full height; when the desired height is selected, the locking pin (fig. 3-1) is placed into position. It may be necessary to rotate the crank handle slightly so that the locking pin drops firmly into one of the holes on the larger idler gear.

g. Turning the handcrank in a counterclockwise direction reverses the sequence described in above.

5-5. Counterpoise Adaptor Unit

On Mast AB-903/G procured on order FR 28-043-J5-00736(E) and contract DAAB05-67-0173, items furnished were a counterpoise adap-

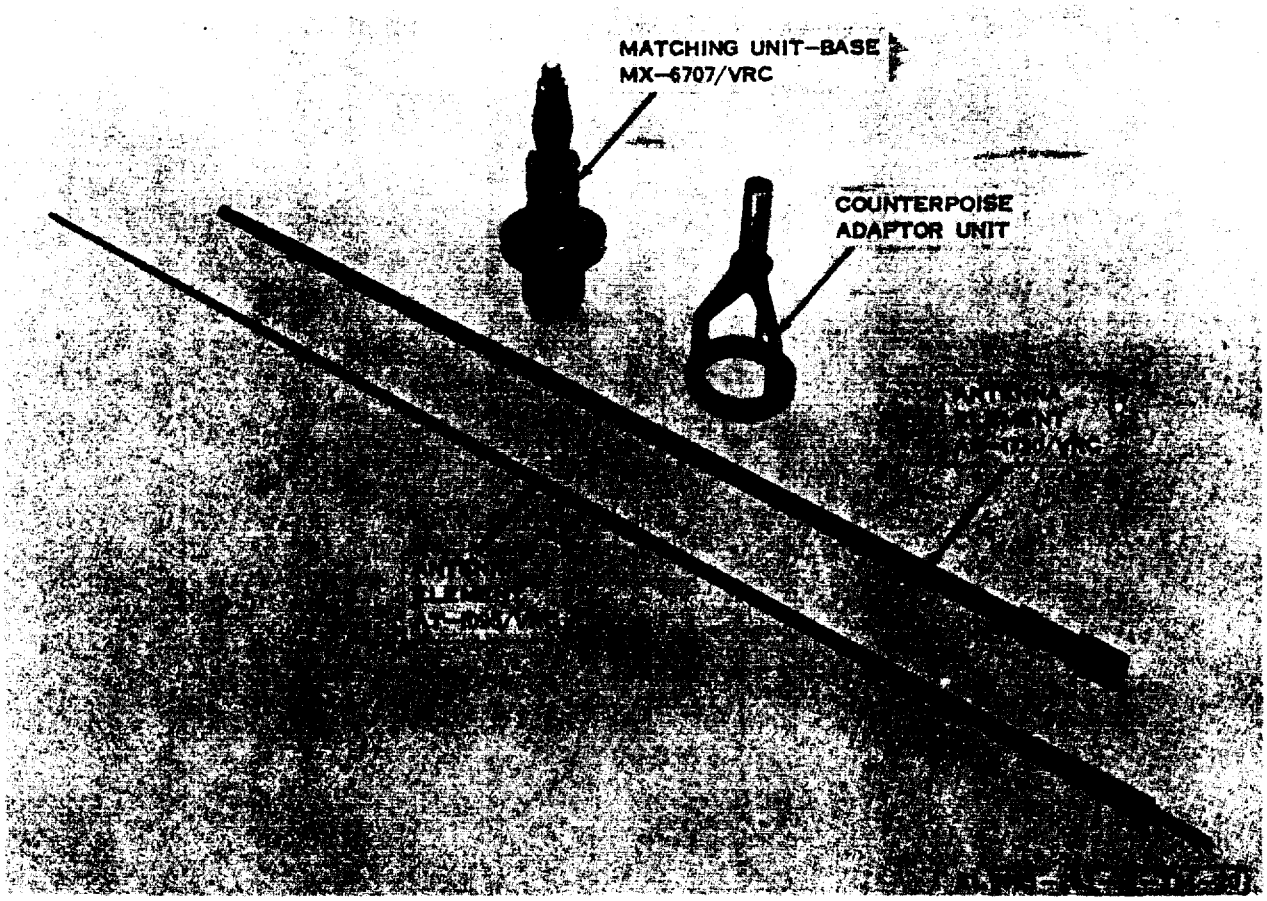

Figure 5-5. Counterpoise adapter unit and disassembled Antenna AS-1729/VRC.

tor unit and four counterpoise tubes (figs. 5-5 and 5-7). The counterpoise assembly, together with the associated Antenna AS-1729/VRC, comprima a *ground-plane antenna. The* whip portion of the AS-1729/VRC acts as the radiating element, with the counterpoise assembly as an artificial ground.

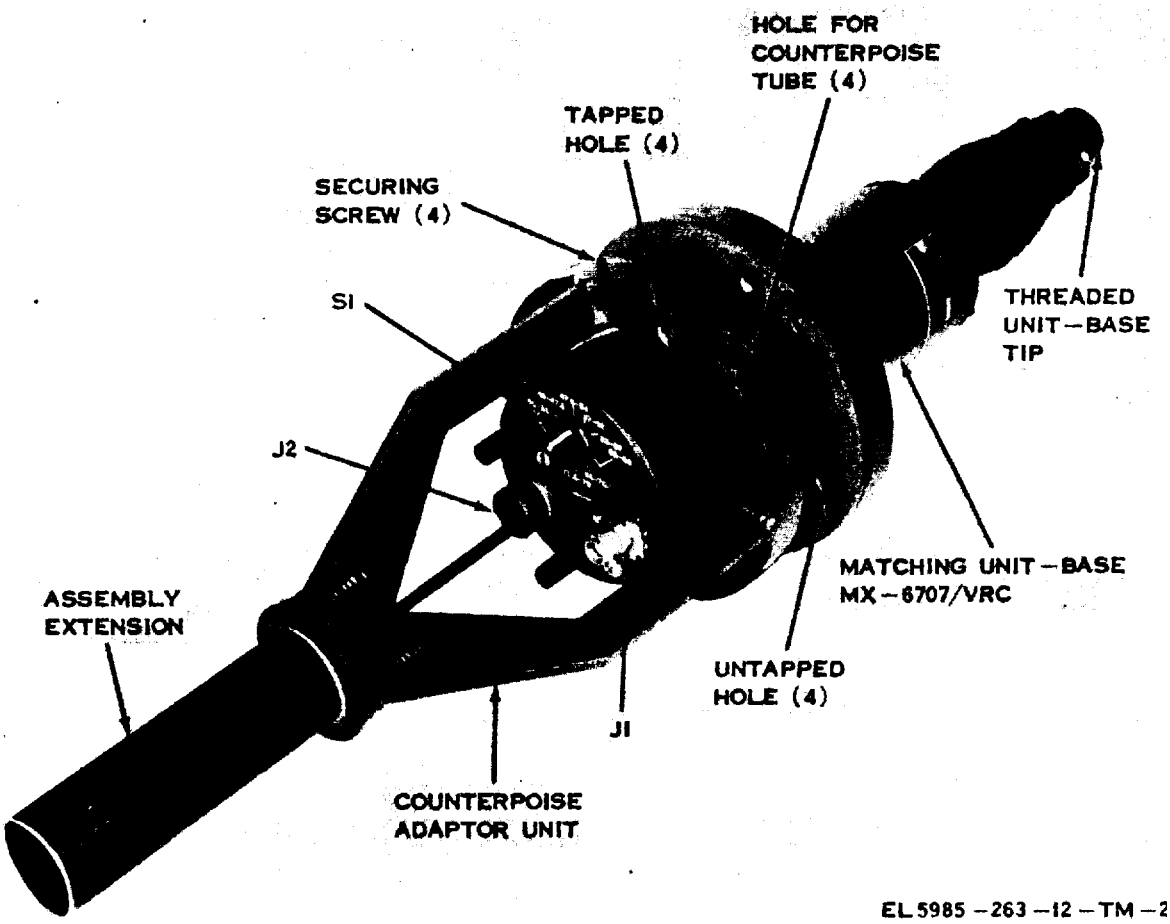

Figure 5-6. Counterpoise adaptor unit and Matching Unit-Base MX-6707/VRC.

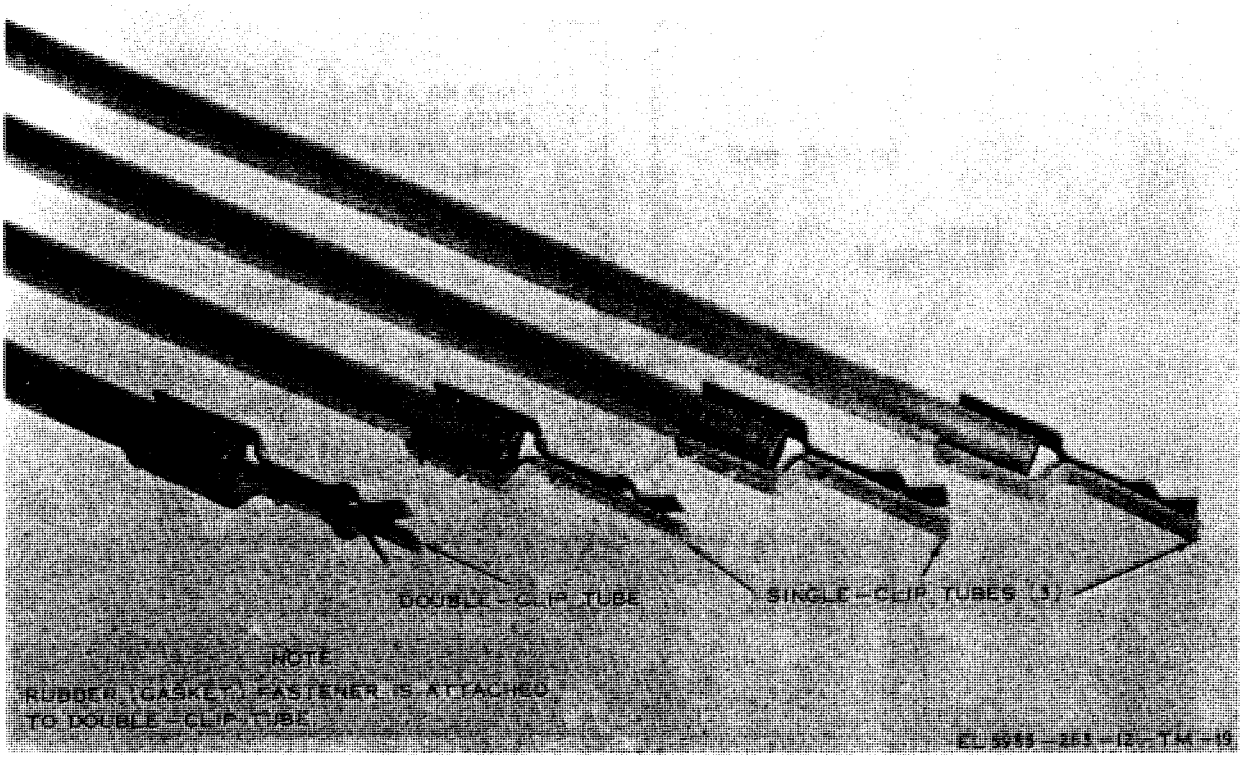

Figure 5-7. Counterpoise assembly tubes, clip ends.

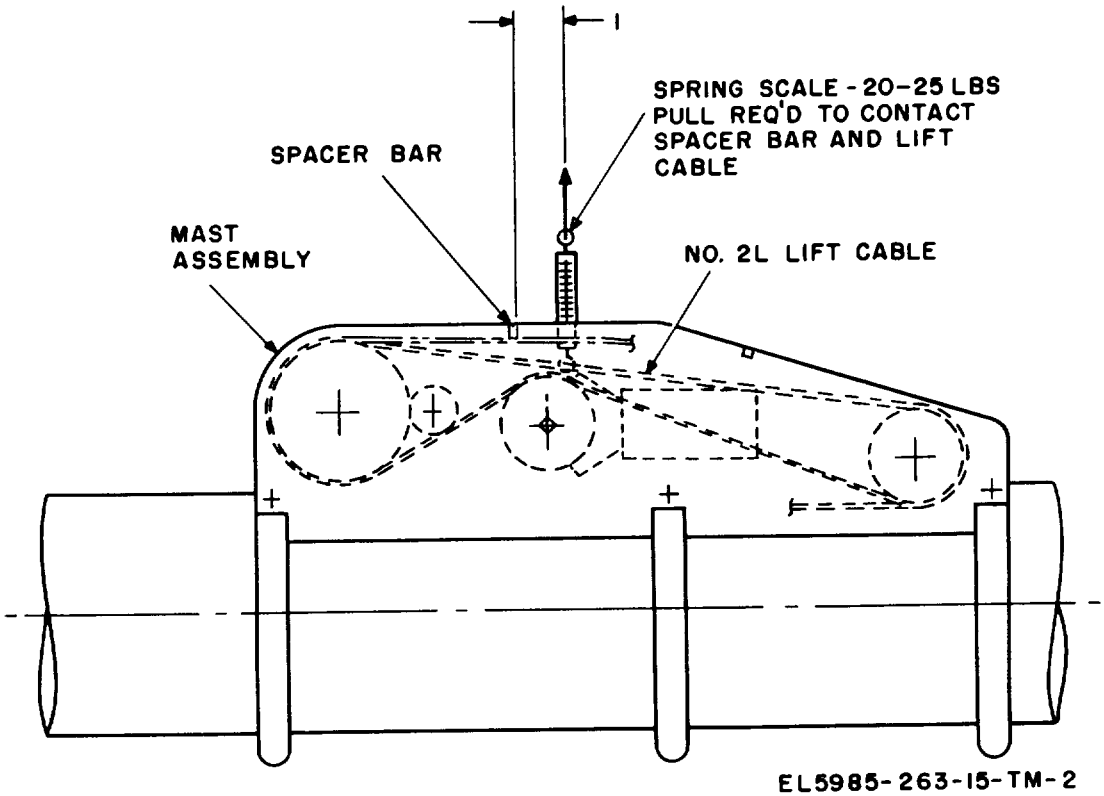

Figure 5-8. Tensioning gage for lift cable 2L.

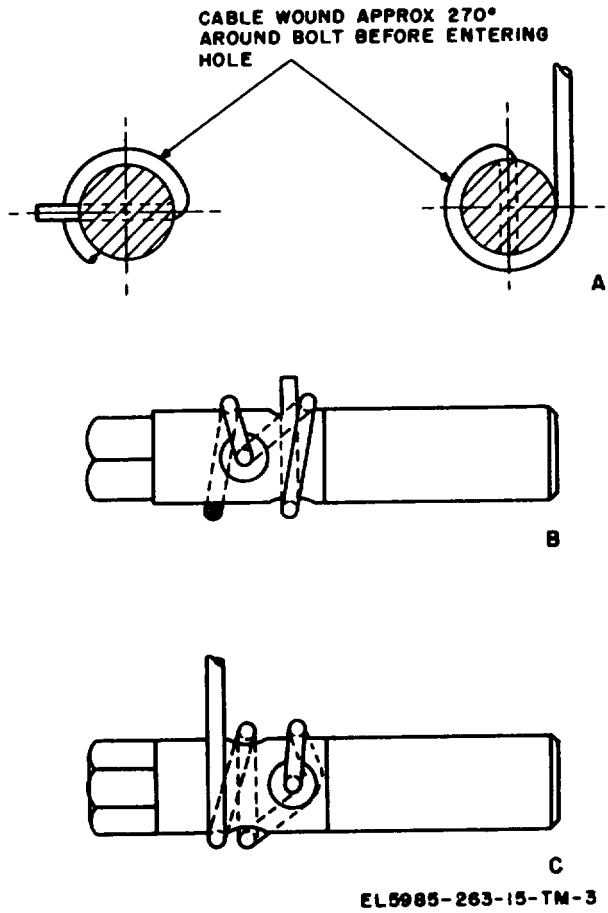

Figure 5-9. Cable installation on adjusters.

CHAPTER 6

DIRECT SUPPORT MAINTENANCE

Section I. MAINTENANCE INSTRUCTIONS

6-1. General

The direct support maintenance procedures outlined in this chapter supplement the procedures described for organizational maintenance. The systematic troubleshooting procedure, which begins with the operational and sectionalization checks that can be performed at the organizational maintenance category, is carried to a higher category of maintenance in this section. Adjustment of the winch brake (para 6-4 and fig. 5-2) and adjustment of the cable tension (para 6-5) are covered in this chapter.

6-2. Tools and Equipment Required

The authorized tools and test equipment are listed in appendix C.

6-3. Organization of Troubleshooting Procedures

a. The first step in servicing Mast AB–903/G, or any of its associated components, is to sectionalize the fault to one of the mast sections listed in b below. The second step is to localize the fault to a defective part responsible for the abnormal condition. Some faults, such as worn, frayed, or broken cables, or dented or cracked mast sections, can often be located by sight, hearing, or feeling.

b. Sectionalization in Mast AB–903/G involves the major components listed below:

(1) Winch assembly (fig. 5-2).

(2) Any of the six individual mast sections (figs. 7-2, 7-3, and 7-6).

(3) Any of the cable assemblies 2 through 6.

(4) Components shown in figures 2-2, 1-3, and 1–4.

c. Components listed in *b* (1) through (3) above, which must be repaired or replaced, must be referred to a higher category of maintenance; however, adjustment of cables 2 through 6 is authorized at direct support maintenance.

6-4 Adjustment of Winch Brake

CAUTION

The mast must be vertical and secure to insure satisfactory adjustment of the winch brake with antenna installed. An equivalent weight of 20 pounds may be used in place of the antenna.

a. Raise the mast to approximately halfway position (15 feet) using the handcrank.

b. Remove the eight dust cover screws (fig. 3-1) which hold the dust cover over the winch assembly.

c. While holding the crank handle, loosen the check nut adjustment (fig. 5-2) which secures the screw that holds the winch brake against the winch drum.

CAUTION

Do not overtighten; damage to components may result.

d. Tighten the setscrew until the winch brake will hold the mast and antenna load at any position without pressure being applied to the crank handle to prevent motion of the mast sections. Tighten the check nut adjustment to secure the setscrew.

e. Replace the dust cover by securing the eight dust cover screws (fig. 3-1).

f. Retract the mast. The mast should hold when stopped at any position.

6-5. Adjustment of Cable Tension
(figs. 5-1, 5-8, and 5-9)

a. *General*. Adjustment of cable tension is required when distances between mast sections of a retracted mast are unequal, or if lift cable 2L in the gearbox can be pulled out to a point where it touches the spacer bar. Tensioning procedures (*b* below) can only be performed on cables that have been used or prestretched as described in paragraph 7–7. Remove the base capscrews from the base cap at the bottom of the mast to allow removal of the base cap and provide access to the locknut (fig. 6-3) if required.

b. Tensioning. After it has been determined that tensioning is required *(a* above), retract the mast and place it in a vertical position and adjust tension as described below.

(1) Tension retract cable 2R by turning cable adjuster 1C until cable contacts winch sideplate spacer bar when 25 or 30 pounds of force are applied to lift cable 2L.

(2) Tension lift cable 3L by turning cable adjuster 1A until No. 3 upper housing and No. 2 upper housing separate 1/32 inch.

(3) Tension retract cable 3R by turning adjuster 1B until the two upper housings contact.

(4) Tension lift cable 4L by turning cable adjuster 2B until No. 4 upper housing and No. 3 upper housing separate 1/32 inch.

(5) Tension retract cable 4R by turning cable adjuster 2A until No. 3 and No. 4 upper housings contact.

(6) Tension lift cable 5L by adjusting cable adjuster 3B until No. 5 upper housing and No. 4 upper housing separate 1/32 inch.

(7) Tension retract cable 5R by adjusting cable adjuster 3B until No. 4 and No. 5 upper housings retract.

(8) Tension lift cable 6L by adjusting cable adjuster 4B until No. 6 upper collar and No. 5 upper housing separate 1/32 inch.

(9) Tension retract cable 6R by adjusting cable adjuster 4A until No. 6 upper collar and No. 5 upper housing contact.

(10) Cycle mast five times with a 15- to 20-pound load installed on the mast. Remove load.

(11) Check tension of cable 2L with mast retracted. If required, retension as described in (1) above.

(12) Inspect upper housings with mast retracted and determine if housings are all in contact with each other. Retensioning may be required by repeating procedures given in (1) through (11) above.

6-6. Replacement of Base Cap

(figs. 5-3 and 2-2)

CAUTION

It is extremely important that the base cap be replaced in the manner described below. Failure to follow the procedures exactly as stated with result in one of the drainage holes being plugged shut by the hardware inside the base of tube assembly No. 1 which supports pulley 5.

a. Carefully examine the base cap and note the position of the drainage holes. If necessary, draw a light pencil line between the holes (which will also pass through the square hole).

b. Examine the bottom of tube assembly No. 1 and note the alignment of cable adjuster 1C (fig. 5-3). When the cap is replaced, the line through the drainage holes should be parallel with the shaft of cable adjuster 1C.

c. Place the cap on the bottom of the mast. Be sure that both drainage holes are cleared. If necessary, clean the drainage holes before securing the base cap to the mast.

d. If one of the drainage holes is blocked by the hardware that holds pulley 5, rotate the cap 90° (one-quarter turn) in either direction. This action will clear both drainage holes and the cap is ready to be fastened to the bottom of tube assembly No. 1.

e. Tighten the four base cap screws (fig. 2-2) so that the base cap is secure against the bottom of the mast.

Section II. TESTING PROCEDURES

6-7. General

Direct support testing procedures are required on Mast AB–903/G. The tests described in this section determine the adequacy of the repair procedures, if any, that were performed in paragraph 6-3 through 6-6, and also those maintenance procedures performed at the operator and organizational maintenance level. If the equipment meets the criteria stated in this section, it is considered adequate for return to the using organization. If the equipment fails to meet the minimum standards stated in these testing procedures, higher category of maintenance is required.

6-8. Physical Test and Inspection

a. Tools Requred.

(1) Authorized tools are listed in appendix C.

(2) No special materials are required.

b. Test Conditions.

(1) There must be enough area to expand the mast to its full 30-foot length. In most tests, this may be done with the mast lying in the horizontal position; however, a few of these tests require that the mast be erected vertically.

(2) To determine if the mast may be tested

in a horizontal position, or if it must be tested in a vertical position, follow the procedures stated in the *Equipment under test* column (*c* below). For tests performed in the vertical position, an antenna, or equivalent weight, should be attached to the top of the mast.

c. Test and Inspection Procedure.

Step No.	Control settings: Test equipment	Control settings: Equipment under test	Test procedure	Performance standard
1	----------	----------	*a.* Inspect all cables and pulleys without removing all dust covers on mast.	*a.* Cables undamaged, and pully shaft retaining rings secure.
			b. Inspect crank handle	*b.* Welds are free of cracks; handle is not bent.
2	----------	----------	*a.* Remove base cap and inspect cable and pulley (inside) (figs. 5–3 and 2–2). Caution: Place cap so that drain holes do not fall in line with pulleys. Do not overtighten screws. **Caution:** Place cap so that drain holes do not fall in line with pulleys. Do not overtighten screws.	*a.* No damage evident to cables and pulleys.
			b. Replace base cap (para 6–6)	*b.* Drainage holes must be free of obstruction.
			c. Remove dust cover from winch assembly. Check internal parts (fig. 3–1).	*c.* Gears and pulleys must be free of dirt and sand.
			d. Replace dust cover (fig. 3–1)	*d.* None.
			e. Remove upper dust covers and inspect pulleys (figs. 3–2 and 5–4). **Caution:** Do not overtighten screws.	*e.* Cables are located on pulleys. No wear evident on cables or pulleys.
			f. Replace dust covers	*f.* None.
			g. Inspect all cover plates, panel lettering, and condition of finish	*g.* No damage or missing parts evident. Lettering will be legible. External surfaces intended to be painted will not show bare metal.
1	----------	----------	*a.* Attach handle to square shaft extending from the mast winch assembly (fig. 3–1). *Note.* The square-ended shaft extends completely through the winch assembly. Select the shaft end with the groove-notched marking.	*a.* None.
			b. Lock the handle with the handle lock	*b.* Lock will fit snugly.
			c. Extract the locking pin and rotate 90° to a lock-out position *Note.* One man is required to raise the mast: anywhere from two to three additional men are required to support the mast (unguyed) when it is fully extended.	*c.* Action will be smooth, without binding.
			d. Crank in the UP direction shown by arrows adjacent to crankshaft. Crank for approximately 25 turns (half-way position) and release handle. *Note.* Winch brake adjustment is given in paragraph 6–4. Also refer to figure 5–2.	*d.* Effort required will be even at all points, without binding. Winch brake will hold mast at this position.
			e. Continue cranking until mast is raised to fully up position. (Approximately 54 turns are required to raise to full height.)	*e.* Vertical holes are visible on lower end of No. 2 tube section.
			f. Lock the mast in fully up position with the locking pin	*f.* Pin will hold mast at the fully up position.

Step No.	Control settings: Test equipment	Control settings: Equipment under test	Test procedure	Performance standard
			g. Unlock the locking pin; then, lower all sections by fully collapsing the mast. Insure that the protective cap is lined up with the hole for inserting the stop pin, and the stop pin may be inserted with ease into the hold to secure the mast for transit.	*g.* Mast will return to fully down position. Protective cap seals end of contracted mast.
			Warning: The following procedure could injure personnel and damage the mast permanently if not followed carefully. Use any necessary personnel to perform these tests. Be sure the area is well lighted and there are no obstructions to prevent the mast from being extended.	
2	N/A	N/A	*a.* Prepare a clean, dry area on a bench or table; then, lay retracted mast along this bench or table.	*a.* None.
			b. Remove securing pin; then, handcrank mast fully until three holes on tube assembly No. 2 are visible (fig. 7–6). If bench or table is less than 30 feet long, add extra tables to support extended mast.	*b.* Mast moves smoothly to fully extended position. Three holes are visible.
			c. Inspect tube assemblies No. 1 through 6 for dents, chips, or breakage. Examine metal for smoothness. All sections should be free of oil, dirt, or grease. All painted sections should be free from chips. Examine dust covers for correct fit; all screws attached.	*c.* Sections are free of dents, chips, or cracks. No oil, dirt, or grease is evident. Surfaces are smooth and clean. Paint is not chipped or scraped away. Dust covers are firmly secured to applicable areas of mast.
			d. Retract mast until it is fully collapsed. Insure that all sections close evenly.	*d.* Mast retracts fully. All sections collapse evenly.
1			*a.* Inspect counterpoise adapter unit (figs. 5–5, 5–6, and 5–7)	*a.* No chip or cracks are visible. All painted surfaces are covered. Securing screws are attached to unit.
			b. Inspect four counterpoise tubes. (fig. 5–7). These tubes should have the two rubber gaskets that hold tubes during transit.	*b.* Counterpoise tubes are not bent, dented, or broken, and gaskets are not cracked or worn.
			c. Remove counterpoise tubes from counterpoise adapter unit by first removing counterpoise wire from ends of tubes; then, remove each of the tubes.	*c.* None.
			d. Place three counterpoise tubes into slots on tube with rubber gaskets.	*d.* Tubes should fit snugly into slots without falling out, or sliding back and forth.
			e. Remove tubes and reassemble counterpoise assembly. Insure that counterpoise wire is assembled as shown in figures 2–1 and 2–3.	*e.* All tubes are held securely in place by counterpoise securing screws figs. 2–1 and 2–3). Counterpoise wire is free of breaks, kinks, or fraying.

Step No.	Test equipment	Control settings: Equipment under test	Test procedure	Performance standard
			f. Remove counterpoise wire from four tubes; secure it with securing tape.	*f*. None.
			g. Disassemble four counterpoise tubes from counterpoise adapter unit. Secure the three single-clip tubes to the one double-clip tube with the rubber gasket fastener. Place counterpoise assembly into top of stored mast.	*g*. None.

CHAPTER 7

GENERAL SUPPORT MAINTENANCE

7-1. General

The general support maintenance, repair, and testing procedures given in this chapter supplement the repair and testing procedures used at operator, organization, and direct support maintenance. General support maintenance includes disassembly and reassembly of Mast AB-903/G (including six mast sections (tube assemblies Nos. 1 through 6 and all cables), and complete disassembly and reassembly of winch assembly unit.

CAUTION

Be careful when installing old cables because of limited length.

7-2. Tools Required

The tools authorized for general support maintenance are listed in appendix C.

7-3. Disassembly of Mast AB-903/G (fig. 5-1)

a. General. Mast AB–903/G is raised and lowered by cables as described in paragraphs 5-2, 5-3, and 5-4. Failure of any one of the cables will prevent the mast from being raised. Replacement of any one of the cables requires disassembly of the winch assembly, and sometimes one or more of the pulleys and may also require disassembly of tube assemblies Nos. 1 through 6 depending on the location of the cable to be replaced. Disassembly of the mast begins with tube assembly No. 1 and continues through No. 6. Reassembly is performed in reverse order. Since these parts may have to be removed when replacing a cable, all cables should be inspected for possible replacement when a broken or worn cable is found to be the source of trouble. Look for signs of fraying cables, particularly on the ends; inspect the cable adjuster to be sure that the cable is securely fastened to the adjuster. After the mast has been thoroughly disassembled, inspect each individual tube assembly to determine if there are cracks or dents around the outside diameter and at the base of each assembly. Be sure that each tube assembly will slide easily into its adjoining assembly, and that the grooved keys on each assembly are not chipped or cracked; this is especially true for tube assembly No. 6 which has the smallest diameter and which supports the antenna used with the mast.

b. Initial Procedures.

(1) Remove the tension in all cables (para 6-5a).

(2) Remove the crank handle, if applicable.

(3) Insure that the locking pin (fig. 3-1) is disengaged from the large idler gear (fig. 5-2).

(4) Insure that the stop pin and the toggle lock are released at the top of the mast.

(5) Remove the dust cover on the winch assembly by removing the eight screws (fig. 3–1).

c. Disassembly of Winch Assembly.

(1) Remove the two snapsprings (fig. 7-1) on either end of the brake assembly.

(2) Remove both nuts from either end of the cable drum assembly.

(3) Remove the screws that secure the dust cover mounting frames to both sideplates of the winch assembly. Remove the dust cover mounting frames.

(4) Remove the three sideplate bolts that secure the sideplate to the winch assembly (crank handle side). Remove the sideplate. Remove the snaprings from the gear shafts. The brake assembly, the idler gears, and the cable drum assembly can now be removed.

(5) The ends of cables 2L and 2R are held to the cable drum assembly by their own cable attachment lock. To loosen the cable from the drum, remove the screws that hold the attachment lock to the drum; then, remove the lock. The end of the cable will be free and can be unwrapped from around the drum.

(6) The locking pin remains attached to the sideplate. To remove it from the sideplate, loosen the two nuts and screws that hold it to the sideplate; the pin can now be removed.

(7) Separate the gear from the drum by removing the two screws and tapping lightly to separate the three spring pins.

(8) To remove the winch brake, loosen the check nut adjustment and remove the nut. With

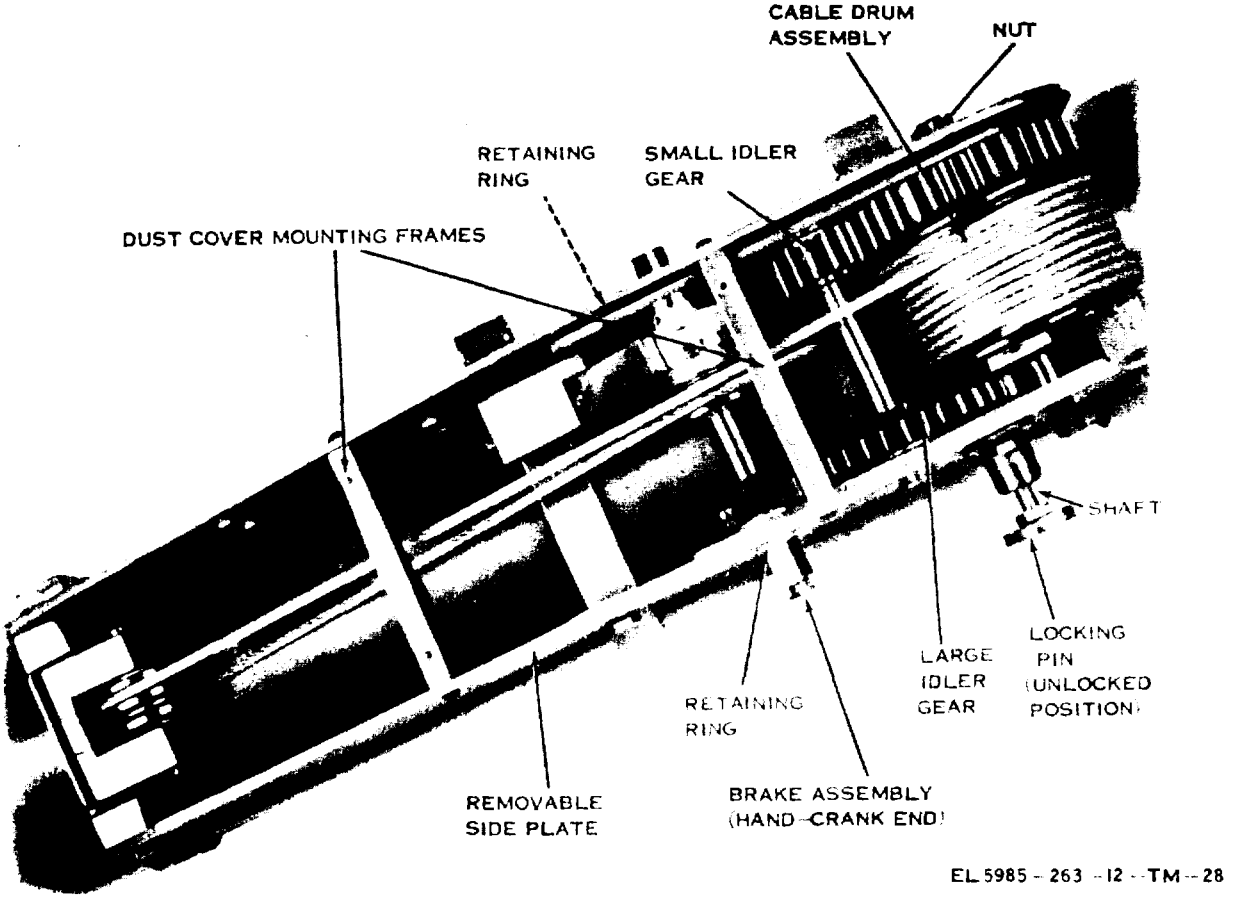

Figure 7–1. Winch assembly components prior to disassembly.

a small screwdriver, turn the screw that holds the winch brake to the winch brake mounting frame until the winch brake is worked loose from the mounting frame. Remove the winch brake.

d. Removal of Base Cap (figs. 5-3 and 5-4). To remove the base cap, follow the procedures given in paragraph 6-5.

e. Disassembly of Tube Assemblies.

(1) Remove the stop pin (fig. 5-4).

(2) Disconnect all four cables at upper end as follows:

(a) To loosen cables (6L and 6R), remove the two nuts on the opposite side of cable adjusters 4A and 4B.

(b) To loosen cables (5L and 5R), remove the two nuts on the opposite side of cable adjusters 3A and 3B (fig. 3-2).

(c) To loosen cables (4L and 4R), remove the two nuts on the opposite side of cable adjusters 2A and 2B (fig. .5-4).

(d) To loosen cables (3L and 3R), remove the two nuts on the opposite side of cable adjusters 1A and 1B (fig. 3-2).

(e) Loosen the locknut (fig. 5-3) on the opposite side of cable adjuster 1C.

(f) Turn all cable adjusters *((a)* through *(e)* above) until tension is removed from the cables; then, pull all cables through the cable adjusters until they are free.

CAUTION

Do not attempt to pull apart the individual mast sections at this time. Each section has a large ring on its bottom (inside) end which will prevent the mast sections from coming apart until the following procedure is performed.

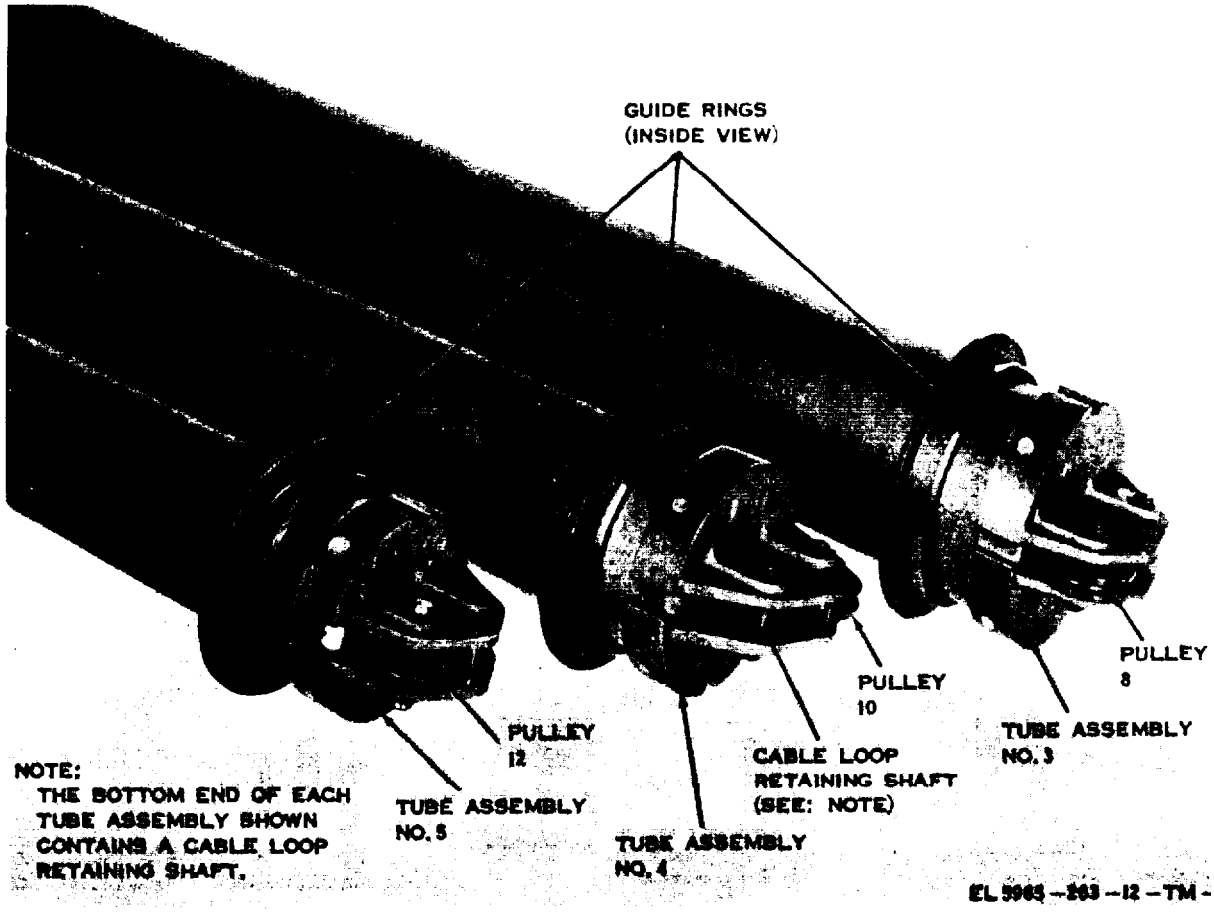

Figure 7-2. Tube assemblies Nos. 3, 4, and 5, bottom view.

(3) Remove the four screws from the guide ring (figs. 7-2 and 7-3) on the top of tube assembly No. 5.

(4) Manually slide tube assembly No. 6 (fig. 7-4) from tube assembly No. 5 (fig. 7-3). Be sure that cables 6L and 6R are completely removed.

NOTE

Tube assembly No. 6 is the only tube assembly which has no pulley at its base.

(5) Remove the four screws from the guide ring (fig. 7-3) on the top of each of the other tube assemblies (Nos. 4, 3, 2, and 1). As each guide plate is removed, separate the smaller diameter tube from its larger diameter counterpart. When these tubes are disassembled, cables 5, 4, and 3 should be free of the tubes, and pulleys 12, 10 and 8 (fig. 7-2) should be visible and ready for access or replacement, if required.

(6) To separate tube assembly No. 2 from tube assembly No. 1, first check to see that the cable is free from cable adjuster 1C (fig. 5-3). Then check to see that cables 2L and 2R are free from the cable drum assembly (fig. 7-1); cable 2L and 2R attachment locks should be free. Finally, check to see that the winch assembly is disassembled as described in c above and the guide plate is free.

(7) Slowly separate the two tube assemblies. It may be necessary to remove each cable separately. When separating the sections, cable 2R will leave the drum first, then cable 2L. Be sure that the cables do not wrap around the components inside the winch assembly.

(8) If difficulty is encountered in removing the cables from any of the individual tube assemblies because of cable snagging around a pulley, it may be necessary to remove the pulley. To remove a pulley, remove the snaprings that secure

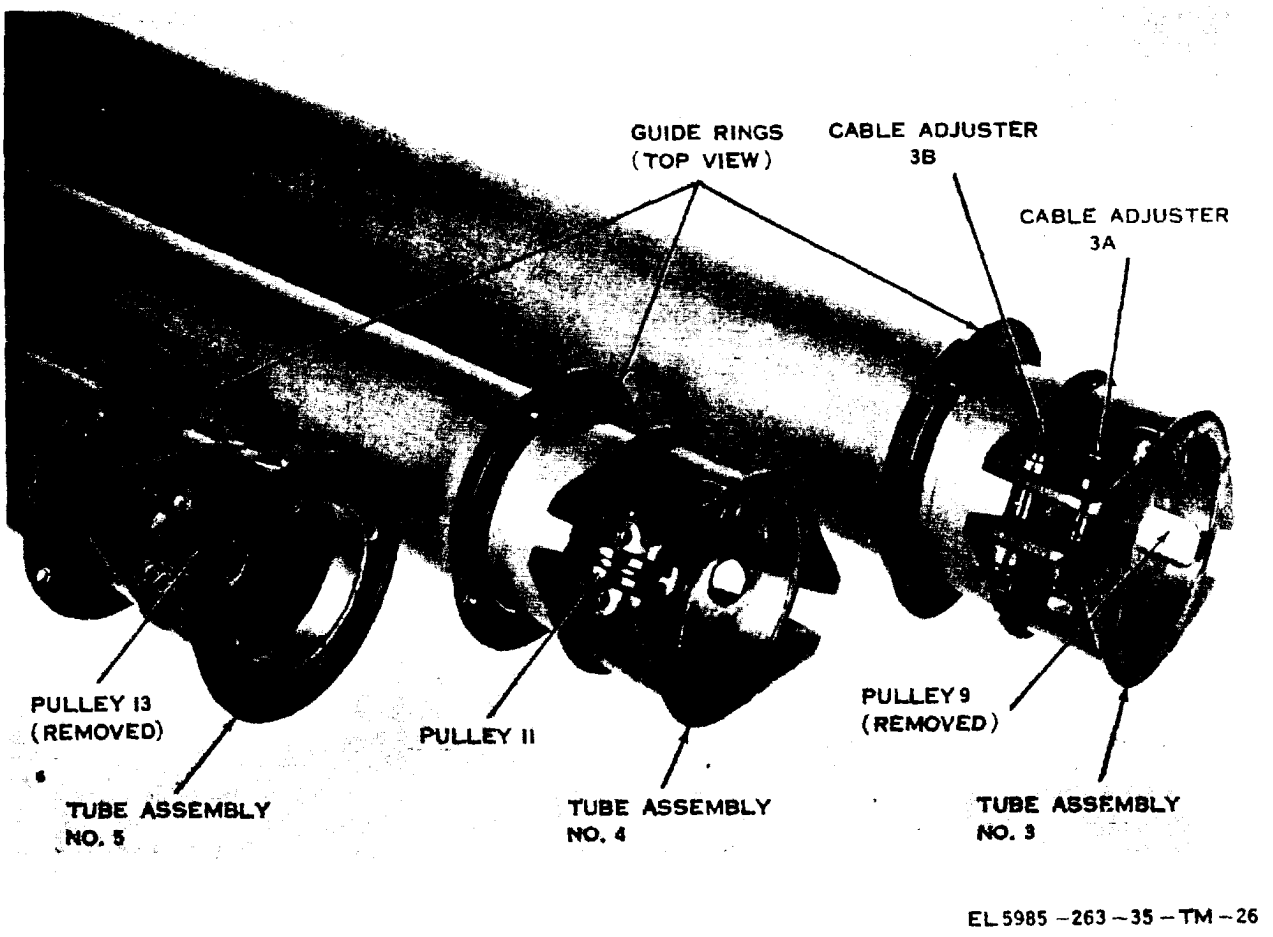

Figure 7-3. Tube assemblies Nos. 3, 4, and 5, top view.

the pulley shaft on either end and slide the shaft out; the pulley may then be lifted free. Pulleys at the base of each tube assembly may be removed only when the tube is separated from its counterpart.

f. Disassembly of Minor Components.

(1) To remove the ring assembly (figs. 7-2 and 7-3) inside of tube assembly No. 1, loosen the four ring fastening screws around the outside of the bottom end of tube assembly No. 1. Invert the tube, and gently shake it until the ring assembly falls out.

(2) To remove the cable loops (fig. 7-5) from the end of tube assemblies Nos. 3 through 6, the cable loop retaining shaft must be removed (fig. 7-4). Open the snapring and remove the shaft; the cable loop will slide off easily.

NOTE

Cable loops are held in shape by cable clamps, (fig. 7-5). If the cable clamp is broken, or appears worn, discard the entire cable and replace it with a new one (para 7-4).

(3) To remove any pulley, open the snapring on the pulley shaft and remove the shaft and pulley.

NOTE

The guide rings on tube assemblies Nos. 2 though 6 and the lower guy plate on tube assembly No. 1 cannot be removed; these items are factory sealed. If these items are defective, the entire tube assembly must be replaced.

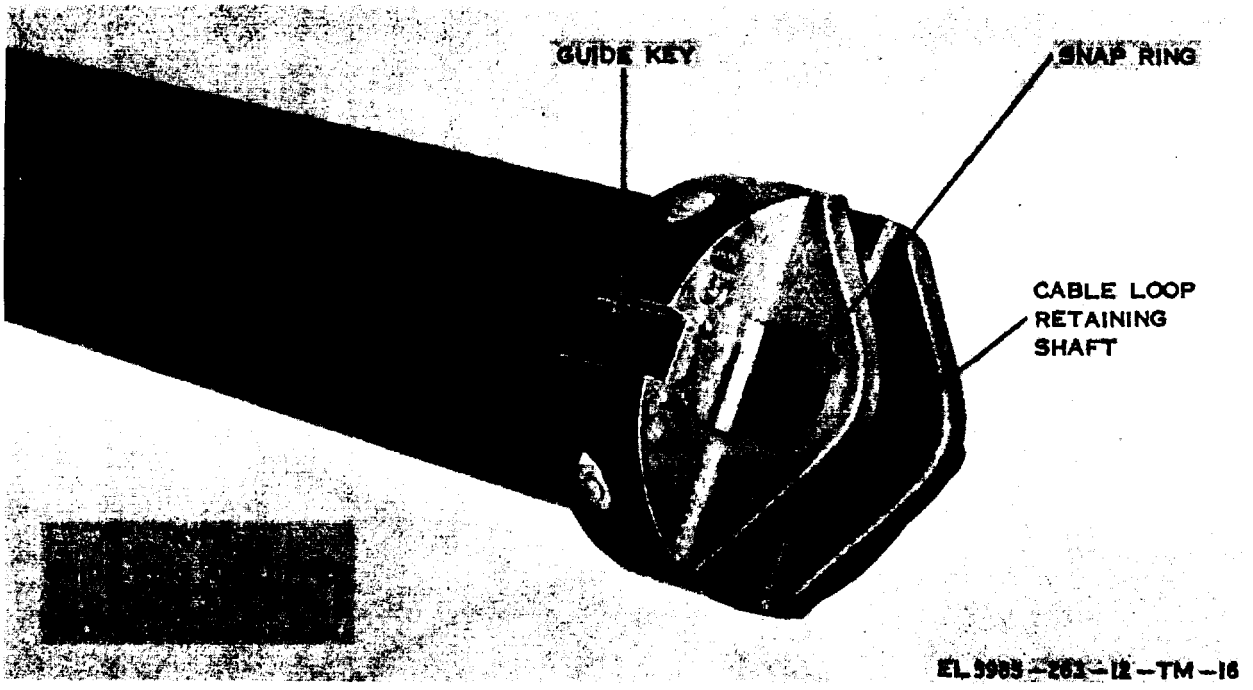

Figure 7-4. Tube assembly No. 6, bottom view.

7-4. Reassembly of Mast AB-903/G (fig. 5-1)

a. General. Reassembly procedures for the cables, pulleys, ring assembly, tube assemblies, and winch assembly are given below. Of these items, cable replacement is the most critical. The cables must show no signs of wear or fraying; if there is the slightest doubt as to the condition of the cable, replace the cable. Cables 3 through 6 must not be less than 80 inches in length, cable 2L not less than 140 inches long, and cable 2R not less than 128 inches long. This is to insure that sufficient cable length is available on the end to be soldered (fig. 7-5) to allow at least one turn of wraparound over the cable adjuster before tension is applied to any of the cables. The extra length, if any, is NOT cut off until all adjustments have been completed. When cables have been cut to correct length, tin the ends of the cable with solder to prevent fraying.

b. Initial procedures. (fig. 7-6).

(1) Insure that all guide rings are on tube assemblies Nos. 2 through 6, and that the upper guy plate is placed over tube assembly No. 6 before reassembly.

(2) Insure that all pulleys are in place, and not chipped or broken. Inspect the pulley shafts; be sure that the snaprings are on both ends.

(3) Inspect the stop pinhole (fig. 7-7). Check for frayed or worn threads. The pin must be removed before reassembly.

(4) If cables must be replaced, be sure the length of each cable meets the minimum length stated in *a* above.

(5) Inspect all tube assemblies; cracks or dents should not be evident. Inspect the keyway; a typical keyway is shown in figure 7-8. The run of the keyway must be straight and show no signs of stress or uneveness. There must be no dirt, paint, or lubricant along the surface of each tube assembly where the outer surface of the tube rides against the inner surface of the next largest tube.

(6) Examine the winch assembly (figs. 7-1 and 5-2). All gears with teeth must show no teeth missing, chipped, or broken. The cable drum must be intact.

c. *Reassembly Procedures.*

(1) Attach cables 6L and 6R to the bottom of tube assembly No. 6 (fig. 5-1).

(2) Attach cables 5L and 5R to the bottom of tube assembly No. 6 (fig. 5-1).

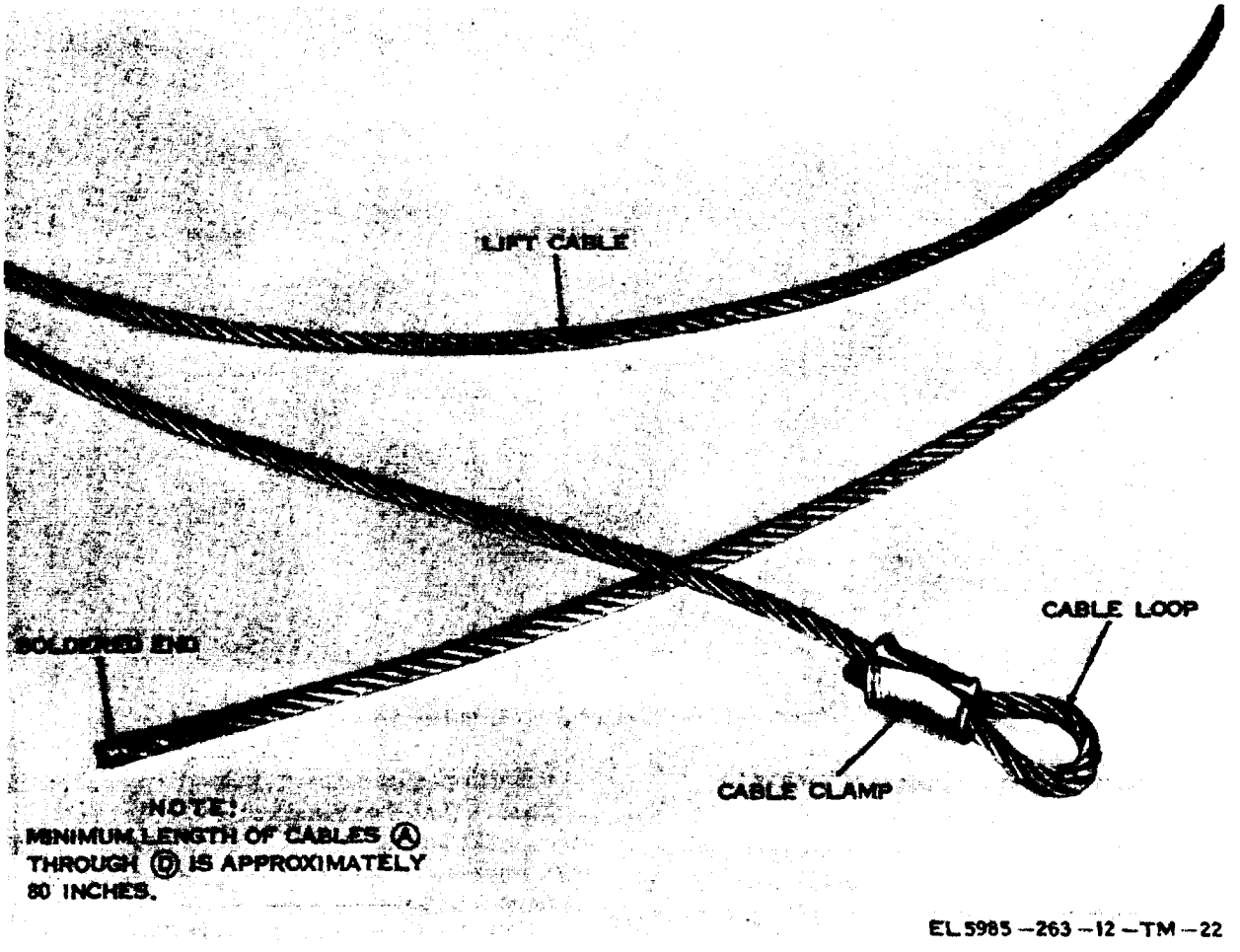

Figure 7-5. Cables 2 through 6, cable fabrication.

(3) Attach cables 4L and 4R to the bottom of tube assembly No. 4.

(4) Attach cables 3L and 3R to the bottom of tube assembly No. 3.

(5) Attach cables 2L and 2R (single length of each) to the bottom of tube assembly No. 2 (fig. 7-9). Tape cable 2L to tube assembly No. 2 during most of the remaining assembly procedures.

(6) Thread the cable through tube assemblies No. 1 through 5 as follows:

(a) Run a stiff wire (or an extra cable) at least 6 feet long up through the hole in the bottom of the tube assembly.

(b) Tape the cable to the stiff wire. Pull the soldered end (fig. 7-5) through the hole, laying the tubes end to end as shown in figure 7-8. Tape the second length (cable 6, 5, 4, or 3) to the side of the tube assembly.

(7) Join the tube assemblies as shown in figure 7-8. Start assembly with smallest diameter tube assembly. Insure that the guide key fits evenly into the keyway. It may be necessary to raise the rear end of the smallest diameter tube assembly so that it slides easily into the larger diameter tube assembly.

(8) As the tube assemblies are connected, thread the lift (up) cables through the hole in the outermost (larger diameter tube), and the lowering (down) cables over the pulleys.

(9) As the tube assemblies are telescoped together, pull the slack out of the cables. Thread the end to be soldered through the cable adjuster for that cable as shown in figure 5-9.

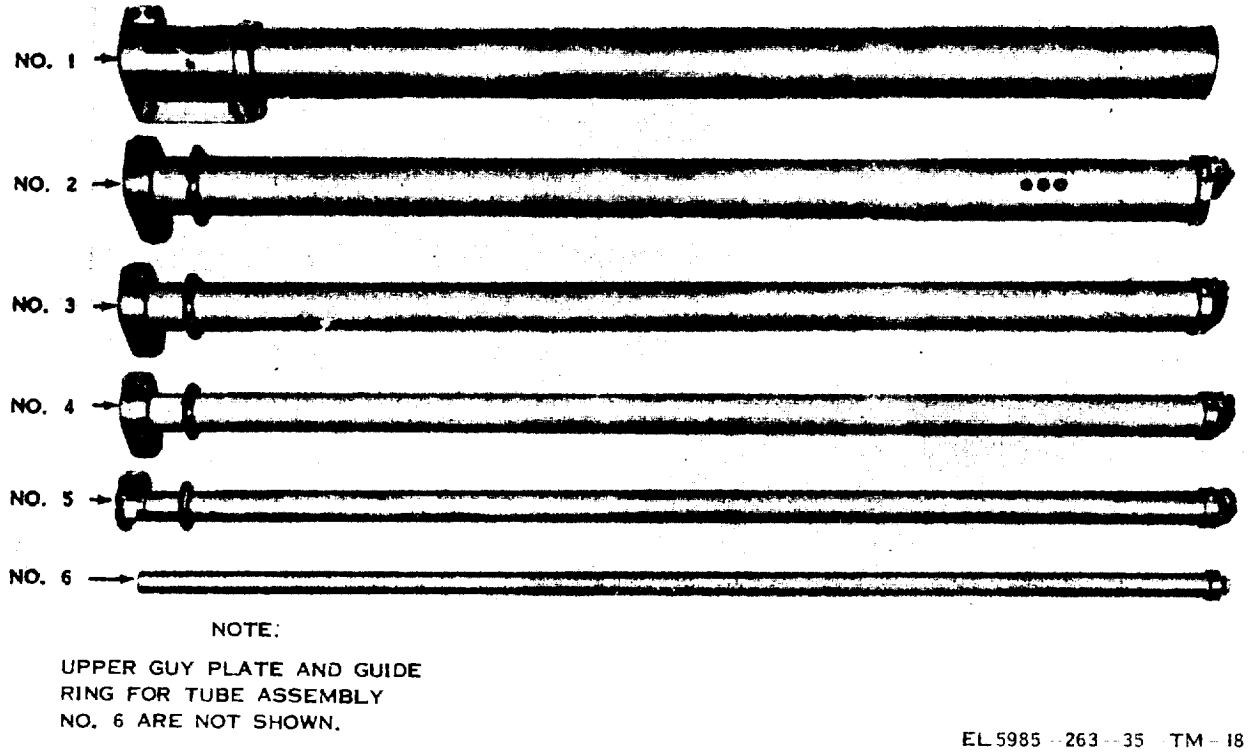

Figure 7-6. Tube assemblies Nos. 1 through 6.

(10) Slowly turn the cable adjuster *clockwise,* using the tool required (para 6-2). Balance each pair of tubes as they are fully contraced together.

(11) Tighten up the cable adjusters just enough to take up the slack. Do NOT attempt to make cable tension adjustments at this time.

(12) Refer to figure 5-1, and thread cable 2L from the bottom of tube assembly No. 2 through the hole in the side of tube assembly No. 1 and over pulleys 4 and 3. Pull the cable through the hole until the slack is taken up. Then, pull the cable over pulley 1.

(13) Thread cable 2R through the hole in the side of tube assembly No. 1 and over pulleys 1 and 2 as shown in figure 5-1.

NOTE

Before performing the procedures given in (14) (15) and (16) below, tube assembly No. 2 *must* be fully inserted into tube assembly No. 1.

(14) Wind cable 2L two turns on the large idler gear side (fig. 5-2) of the cable drum assembly (fig. 7-1).

(15) Run the excess cable down through the hole in the cable drum. Replace the cable 2L attachment lock (fig. 5-2) on the cable drum as. sembly with the screws required to secure the cable.

(16) Wind cable 2R around the cable drum assembly around the remaining run on the drum toward the crank handle side of the drum. Run the excess cable down through the hole on the drum, and replace the cable 2R attachment lock (not shown) into the slot on the large-toothed gear (fig. 5-2) with the two screws required.

NOTE

Tape the cable windings to the drum during the remainder of the assembly to prevent the cables from loosening. If necessary, the cable turns may be flattened with a rubber mallet while on the cable drum assembly before the retainer is tightened.

(17) Align the cable drum assembly so that the secured end of cable 2L enters at the top of the drum with the required two turns as stated in (14) above. This alignment is shown in figure 5-2.

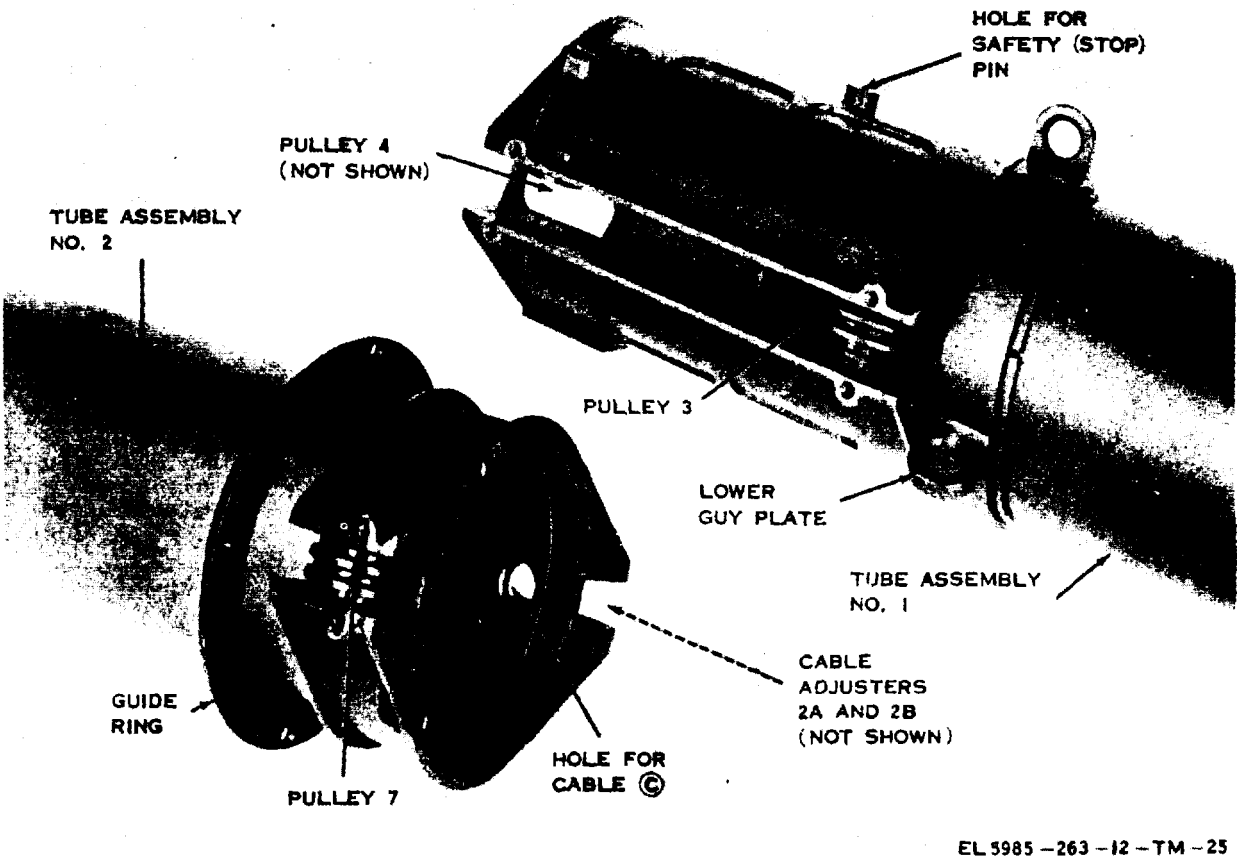

Figure 7-7. Tube assemblies Nos. 1 and 2.

7–5. Reassembly of Winch Assembly

Reassemble the winch assembly as follows:

a. If the large idler gear (fig. 5-2) has been removed from the cable drum assembly, replace it with the two screws and three spring pins.

b. If the winch brake has been removed, replace it. Engagement should not take place at this time. Final adjustment of winch brake should be performed on completion of final assembly.

CAUTION

Do not overtighten screws. Damage to the components may result.

c. If the locking pin has been removed, fasten it to the sideplate with the two nuts and screws. Tighten the screws; be sure that the locking pin is free to move in and out through the hole in the sideplate.

d. Reassemble the cable drum assembly, idler gears, and brake assembly as shown in figures 5-2 and 7-1. It may be necessary to turn the gears slightly until they fit evenly into position. Do NOT force the gears into place; when they are meshed together, they will fit evenly and rotate smoothly. Replace the snaprings on the gear shafts on both sideplates.

CAUTION

Do not overtighten bolts. Damage to components may result.

e. Replace and tighten the three sideplate bolts that were removed in paragraph 7-3 *c* (4) from the crank handle side. Be sure that all gears and parts fit smoothly before final tightening of hardware.

CAUTION

Do not overtighten nuts. Damage to components may result.

f. Replace and tighten the nuts (fig. 7-1) on both sides of the cable drum assembly. Be sure that all snaprings are in place on all gears, but do not replace the dust cover at this time.

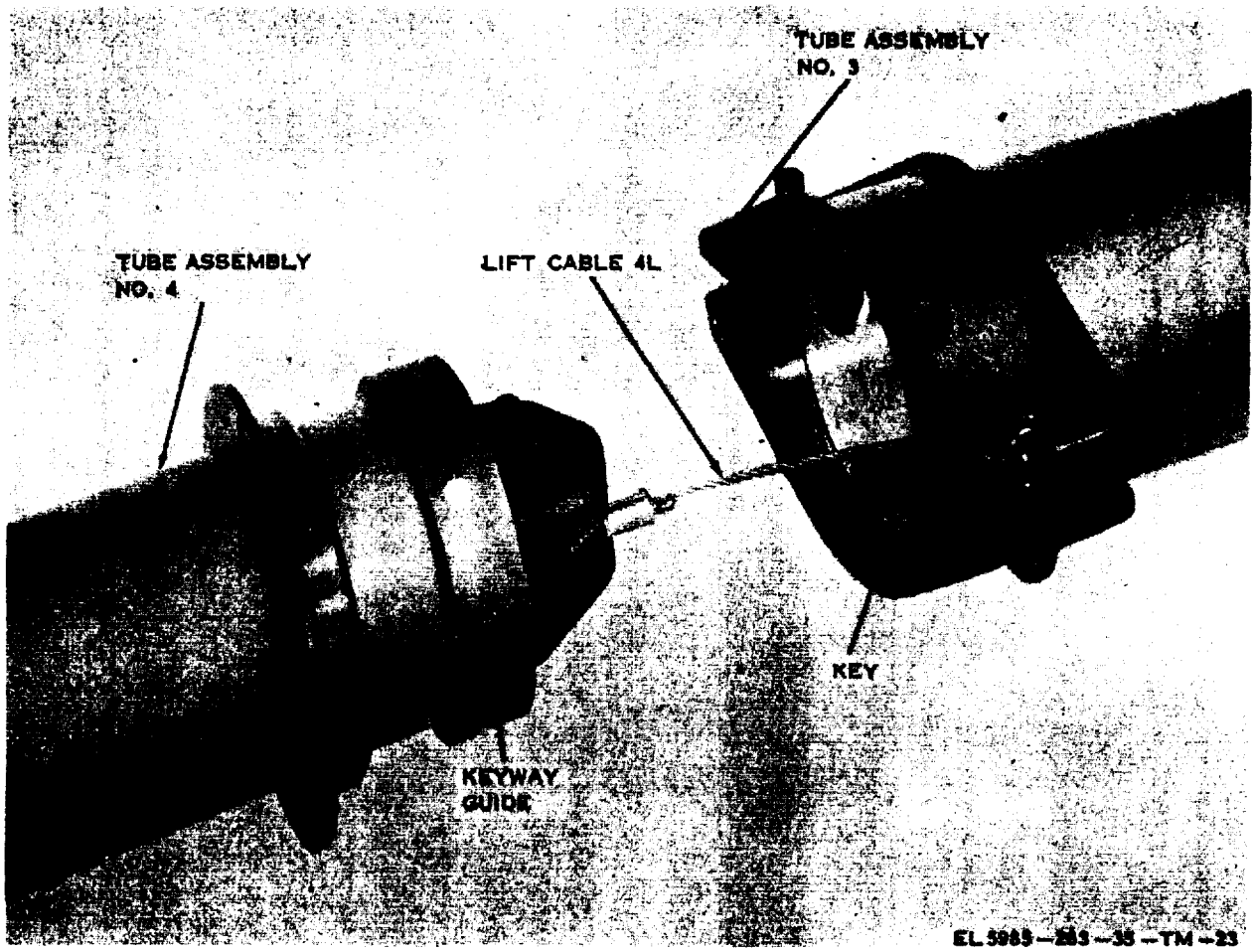

Figure 7-8. Tube assemblies Nos. 3 and 4 ready for assembly.

7-6. Final Adjustment Procedures

After the procedure given in paragraph 7-5 *f* is completed, nearly all the slack in cables 2L and 2R should be removed; that is, cable runs around the cable drum are straight and some tightness of the cables is evident. The mast must be fully contracted during the following steps. Remember that the tightening of one cable will also tighten the other cable since they are effectively one continuous cable.

a. Insert cable 2R into the hole in cable adjuster 1C (fig. 5-3).

b. Equalize the tension in both cables by pulling on cable 2L while performing the adjustment in c below.

c. Loosen the locknut on the right-hand side of cable adjuster 1C (fig. 5-3) ; then, with a 3/8-inch wrench (FSN 5120-449-8199), tighten cable adjuster 1C until all the slack is removed from cable 2L. Hook spring scale, etc. Then tighten the locknut.

d. After cables 2L and 2R are tightened, cables 6, 5, 4, and 3 must be tightened. Loosen all locknuts on the opposite sides of cable adjusters 1A, 1B, 2A, 2B, 3A, 3B, 4A, and 4B (figs. 2-4 and 2-5).

7–7. Prestretch Cables

a. Retain mast in retracted position.

b. Tension retract cable 2R until 25 to 30 pounds of force on lift cable 2L cause cable to contact winch sideplate spacer bar.

c. Exert 100 inch-pound torque on retract cable 3R tensioner and lock.

d. Repeat *c* above for retract cable 4R tensioner and lock.

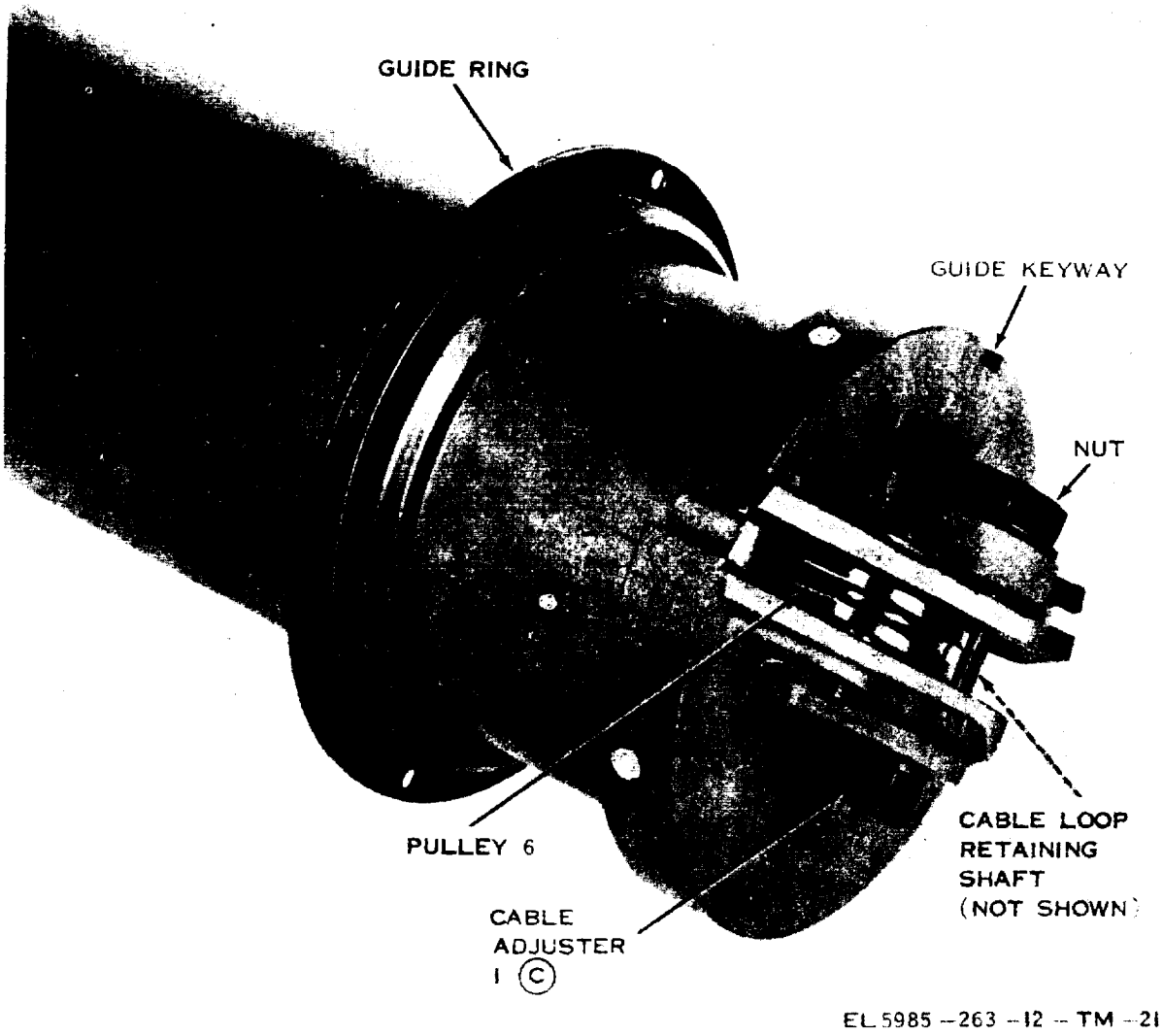

Figure 7-9. Tube assembly No. 2, bottom view.

e. Exert 75 inch-pound torque on retract cable 4R tensioner and lock.

f. Repeat e above for lift cable 4L.

g. Exert 50 inch-pound torque on retract cable 5R tensioner and lock.

h. Repeat *g* above for lift cable 5L.

i. Exert 50 inch-pound torque on retract cable 6R tensioner and lock.

j. Repeat *i* above for lift cable 6L.

k. Retain tension for 10 minutes; then, remove tension, leaving cables slack in following order: 6L, 6R, 5L, 5R, 4L, 4R, 3L, and 3R. Retain tension on cables 2L and 2R.

l. Tension cables as described in paragraph 6-5.

m. After all cables have been tensioned, cut the excess cable from the ends and solder the ends.

n. Replace the base cap on the bottom of tube assembly No. 1.

o. Install the dust covers.

p. Insure the drainage holes on the base cap are clear and clean. Be sure that the spring, the toggle lock, and the safety pin are attached to tube assembly No. 1.

q. After the mast is completely assembled, check to see that it raises and lowers evenly.

7–8. Final Testing Procedures

Final testing procedures for Mast AB–903/G con-

sist of testing the operation and condition of the mast. These test procedures are identical with direct support testing procedures given in paragraphs 6-7 and 6-8. Equipment meeting the criteria of these tests is suitable for return to the user. Those equipments which fail to meet the performance standard must be forwarded to depot maintenance for overhaul and rebuilding.

CHAPTER 8
DEPOT MAINTENANCE

8-1. General

Depot maintenance of the AB-903/G consists of overhaul or rebuild of any individual mast components or the entire mast. Final tests for the rebuilt mast are the same as for direct support maintenance (paras 6-7 and 6-8). The parts available for depot maintenance of the mast are listed in TM 11-5985-263-34P.

8-2. Tools and Materials Required

The tools and materials required for depot maintenance are the same as those listed for general support maintenance. Also, any depot maintenance shop facility can be used for the required maintenance.

CHAPTER 9
SHIPMENT, LIMITED STORAGE, AND DEMOLITION TO PREVENT ENEMY USE

Section I. SHIPMENT AND LIMITED STORAGE

9-1. Disassembly of Equipment

WARNING

Disconnect all radio equipment from the radio-frequency (rf) transmission line and the antenna assembly before performing any disassembly.

a. Prepare a clean, dry surface for stacking the components, preferably one above the ground or floor.

b. Carefully loosen the upper guy ropes, as necessary, making use of any necessary manpower to insure that the mast is under full control at all times.

c. Prepare for lowering the mast by locking the crank handle to the shaft with the handle lock. To do this, slide the retainer clip sideways.

d. Release the locking pin (fig. 3-1.) by lifting the pin straight back, twisting it one-quarter turn (90°) to the lockout position, and resetting it in the released position.

e. To lower the mast; crank the handle counterclockwise (DOWN) (fig. 3-1). Approximately 54 turns of the crank handle are required to fully lower the mast.

CAUTION

Be careful when handling counterpoise tubes and sharp antenna elements to prevent possible serious physical injury.

f. Remove the entire counterpoise assembly for Antenna AS-1729/VRC from the mast.

NOTE

If an antenna other than Antenna AS-1729/VRC is being used, refer to the applicable technical manual for further information.

g. Disconnect Cables CX-4722/VRC and CG-1773/U from Matching Unit-Base MX-6707/VRC. Remove Antenna Element AS-1730VRC from Matching Unit-Base MX-6707/VRC; then separate Antenna Elements AS-1738/VRC and AT-1095/VRC.

h. Remove the counterpoise wire from the one tube which has a double clip on one end. Refer to figure 2-3. Remove the wire from the other three single-clip tubes. Remove the counterpoise spool from the canvas accessory bag and wrap the counterpoise wire around it. Store the counterpoise wire and spool (figs. 1-3 and 1-4) in the accessory bag.

i. Remove the counterpoise elements by loosening the securing screws (fig. 2-3). Fasten the three elements (without the rubber gaskets) to the element with the rubber gaskets by pressing the elements into the slots on the gaskets.

j. Remove Matching Unit-Base MX-6707/VRC from the counterpoise adaptor unit by loosening the four screws with an adjustable wrench. Package Matching Unit-Base MX-6707/VRC and Antenna Elements AS-1730/VRC and AT-1095/VRC in a fiberboard box.

NOTE

Complete packaging instructions for Antenna AS-1729/VRC are given in TM 11-5820-401-20.

k. Unhook the three upper guy wire assemblies on the mast from the upper guy attachment plate (fig. 1-1). Roll them up, and store them in the accessory bag.

l. Use any necessary manpower to hold the mast erect; then, unhook the three lower guy wire assemblies from the lower guy attachment plate, roll them up, and store them in the accessory bag.

m. If the crank handle is attached to the mast, remove the handle by loosening the handle lock (fig. 3-1). Stow the handle in the canvas accessory bag.

n. Lift the mast off the base plate, and carefully lay it down on a clean, dry surface *(a* above) Insure that the mast is fully collapsed.

o. Insert the four counterpoise tubes into the uppermost (innermost) mast section, if applicable. Slide them in carefully so that the rubber gasket does not tear or jam inside the mast. Slide

them in far enough so that the protective cap is placed on the end of the mast.

NOTE

If no counterpoise tubes are furnished with the mast, place the protective cap over the end of the mast.

p. Place the loop of wire closest to the spring (fig. 1-3) over the toggle-lock attachment extension (fig. 1-4). Secure the toggle-lock in the downward position.

q. Position the protective cap (fig. 1-3) so that it is lined up with the hole for inserting the securing pin (fig. 1-4) ; then, insert the securing pin into the hole. Pull slightly on the protective cap to insure that the end of the mast is sealed.

r. Place all accessory items into the canvas accessory bag. Secure the webbing straps on the front of the case.

9-2. Repackaging for Shipment or Limited Storage

The exact procedure for repackaging depends on the material available and the conditions under which the equipment is to be shipped or stored. If available, use as much of the original packing material as possible. The following procedure outlines general packaging methods:

a. Insure that all accessories, including the technical manual, are in the accessory bag. Be sure that Mast AB–903/G is secured with the securing pin and the toggle-lock mechanism.

b. Cushion all surfaces of the accessory bag with paperboard or fiberboard cushioning wrapping material. Cushion Mast AB–903/G in a similar manner.

c. Secure the cushioning around the mast with gummed paper tape. Perform a similar operation with the accessory bag.

d. Place the accessory bag into a fiberboard box, and secure with water-resistant, pressure-sensitive tape.

e. Place Mast AB–903/G into a fiberboard box. Secure with water-resistant, pressure-sensitive tape.

f. Place both secured boxes into a wooden box. Nail down the box lid, and strap the nailed wooden box with flat steel strapping.

NOTE

Refer to SB 38–100 for Federal stock numbers of materials.

Section II. DEMOLITION OF MATERIEL TO PREVENT ENEMY USE

9–3. Authority for Demolition

a. The demolition procedures given in paragraph 9-4 will be used to prevent the enemy from using or salvaging this equipment. Demolition of the equipment will be accomplished only upon the order of the commander.

b. Thorough demolition of equipment will be accomplished through the use of procedures outlined in International Standardization Agreement—STANAG 2113, *Destruction of Military Technical Equipment.* Methods of destruction should achieve such damage to equipment and essential spare parts that it will not be possible to restore the equipment to a usable condition in the combat zone either by repair or cannibalization. The reporting of the destruction of equipment is to be done through command channels.

c. If a destruction plan is not provided by higher authority, one should be prepared by the organization using the equipment. In this plan, personnel should be assigned specific destruction tasks, but all personnel in the using organization should be familiar with all aspects of the complete destruction plan. The plan must be adequate and easily carried out in the field and must provide for as complete a destruction as available time, equipment, and personnel will permit. Because the time required for complete destruction may not always be available, the destruction plan must establish priorities so that essential parts of the equipments will be destroyed in the order of their importance. Systematic destruction of the same important units of equipment of a given type will prevent the enemy from learning the important features of the equipment or assembling a complete equipment by cannibalization of partially destroyed equipment. Adequate destruction of some units of equipment should always be accomplished rather than partial destruction of all units. Which of the methods listed in paragraph 6-4 is to be used depends on the time available for destruction.

9-4. Methods of Destruction

a. Destruction Priority. STANAG 2113 outlines the general priorities for any equipment which is to be destroyed. These priorities, as applied to Mast AB-903/G are listed below.

(1) Cables on all mast sections.
(2) Winch assembly.
(3) All sliding mast sections.
(4) All accessory items.

b. Smash. Smash the gearbox, antenna, and other interior parts; use sledges, hammers, axes, crowbars, or other heavy tools.

c. Cut. Cut the cords and cables; use axes, hand-axes, or machetes.

d. Burn. Burn the cords, and manuals; use gasoline, kerosene, oil, flamethrowers, or incendiary grenades.

e. *Bend.* Bend the panels, casing, connectors, and mast sections.

WARNING

Be extremely careful with explosive and incendiary devices. Use these items only when the need is urgent.

f. Explosives. If explosives are necessary, use firearms, grenades, or TNT.

g. Disposal. Burn or scatter the destroyed parts in slit trenches, foxholes, or other holes, or throw them into nearby streams.

APPENDIX A
REFERENCES

Following is a list of applicable manuals that are available to personnel concerned with Mast AB-903/G.

DA Pam 310-4 . . . . . Index of Technical Manuals, Technical Bulletins, Supply Manuals (types 7, 8, and 9), Supply Bulletins, and Lubrication Orders.

DA Pam 310-7 . . . . . U. S. Army Equipment Index of Modification Work Orders.

SB 38-100 . . . . . Preservation, Packaging and Packing Materials, Supplies, and Equipment Used by the Army.

TB 746-10 . . . . . Field Instructions for Painting and Preserving Electronics Command Equipment.

TB SIG 291 . . . . . Safety Measure to be Observed When Installing and Using Whip Antennas, Field Type Masts, Towers, Antennas, and Metal Poles That Are Used with Communication, Radar, and Direction Finder Equipment.

TM 11-666 . . . . . Antennas and Radio Propagation.

TM 11-5985-262-15 . . . . . Operator, Organizational, DS, GS and Depot Maintenance Manual Including Repair Parts and Special Tool Lists, Antenna AS-1729/vrc.

TM 11-5985-263-34P . . . . . Direct Support and General Support Maintenance Repair Parts and Special Tool Lists (Including Depot Maintenance Repair Parts and Special Tools).

TM 38-750 . . . . . The Army Maintenance Management System (TAMMS).

APPENDIX B

BASIC ISSUE ITEMS LIST

Section I. INTRODUCTION

B-1. Scope

This appendix lists only basic issue items required by the crew/operator for installation, operation, and maintenance of Mast AB-903/G.

B-2. General

The basic issue items list (sec. II) is a list, in alphabetical sequence, of items which are furnished with, and which must be turned in with the end item.

B-3. Explanation of Columns

The following provides an explanation of columns found in the tabular listings:

a. Illustration. Not applicable.

b. Federal Stock Number. Indicates the Federal stock number assigned to the item and will be used for requisitioning purposes.

c. Part Number. Indicates the primary number used by the manufacturer (individual, company, firm, corporation, or Government activity), which controls the design and characteristics of the item by means of its engineering drawings, specifications standards, and inspection requirements, to identify an item or range of items.

d. Federal Supply Code for Manufacturer (FSCM). The FSCM is a 5-digit numeric code used to identify the manufacturer, distributor, or Government agency, etc., and is identified in SB 708-42.

e. Description. Indicates the Federal item name and a minimum description required to identify the item.

f. Unit of Measure (U/M). Indicates the standard of basic quantity of the listed item as used in performing the actual maintenance function. This measure is expressed by a two-character alphabetical abbreviation (e.g., ea, in., pr, etc.). When the unit of measure differs from the unit of issue, the lowest unit of issue that will satisfy the required units of measure will be requisitioned.

g. Quantity Furnished With Equipment (Basic Issue Items Only). Indicates the quantity of the basic issue item furnished with the equipment.

Section II. BASIC ISSUE ITEMS LIST

(1) ILLUSTRATION		(2) FEDERAL STOCK NUMBER	(3) PART NUMBER	(4) FSCM	(5) DESCRIPTION USABLE ON CODE	(6) UNIT OF MEAS	(7) QTY FURN WITH EQUIP
(A) FIG NO.	(B) ITEM NO.						
		5120-243-2985	GGG-H86	81349	HAMMER, HAND	EA	1

APPENDIX C
MAINTENANCE ALLOCATION

Section I. INTRODUCTION

C-1. General.

This appendix provides a summary of the maintenance operations for MAST AB-903/G. It authorizes categories of maintenance for specific maintenance functions on repairable items and components and the tools and equipment required to perform each function. This appendix may be used as an aid in planning maintenance operations.

C-2. Maintenance Function.

Maintenance functions will be limited to and defined as follows:

a. Inspect. To determine the serviceability of an item by comparing its physical, mechanical, and/or electrical characteristics with established standards through examination.

b. Test. To verify serviceability and to detect incipient failure by measuring the mechanical or electrical characteristics of an item and comparing those characteristics with prescribed standards.

c. Service. Operations required periodically to keep an item in proper operating condition; i.e., to clean (decontaminate), to preserve, to drain, to paint, or to replenish fuel, lubricants, hydraulic fluids, or compressed air supplies.

d. Adjust. To maintain, within prescribed limits, by bringing into proper or exact position, or by setting the operating characteristics to the specified parameters.

e. Align. To adjust specified variable elements of an item to bring about optimum or desired performance.

f. Calibrate. To determine and cause corrections to be made or to be adjusted on instruments or test measuring and diagnostic equipments used in precision measurement. Consists of comparisons of two instruments, one of which is a certified standard of known accuracy, to detect and adjust any discrepancy in the accuracy of the instrument being compared.

g. Install. The act of emplacing, seating, or fixing into position an item, part, module (component or assembly) in a manner to allow the proper functioning of the equipment or system.

h. Replace. The act of substituting a serviceable like type part, subassembly, or module (component or assembly) for an unserviceable counterpart.

i. Repair. The application of maintenance services (inspect, test, service, adjust, align, calibrate, replace) or other maintenance actions (welding, grinding, riveting, straightening, facing, remachining, or resurfacing) to restore serviceability to an item by correcting specific damage, fault, malfunction, or failure in a part, subassembly, module (component or assembly), end item, or system.

j. Overhaul. That maintenance effort (service/action) necessary to restore an item to a completely serviceable/operational condition as prescribed by maintenance standards (i.e., DMWR) in appropriate technical publications. Overhaul is normally the highest degree of maintenance performed by the Army. Overhaul does not normally return an item to like new condition.

k. Rebuild. Consists of those services/actions necessary for the restoration of unserviceable equipment to a like new condition in accordance with original manufacturing standards. Rebuild is the highest degree of material maintenance applied to Army equipment. The rebuild operation includes the act of returning to zero those age measurements (hours, miles, etc.) considered in classifying Army equipments/components.

C-3. Column Entries.

a. Column 1, Group Number. Column 1 lists group numbers, the purpose of which is to identify components, assemblies, subassemblies, and modules with the next higher assembly.

b. Column 2, Compoment/Assembly. Column 2 contains the noun names of components, assemblies, subassemblies, and modules for which maintenance is authorized.

c. Column 3, Maintenance Functions. Column 3 lists the functions to be performed on the item listed in column 2. When items are listed without maintenance functions, it is solely for purpose of having the group numbers in the MAC and RPSTL coincide.

d. Column 4, Maintenance Category. Column 4 specifies by the listing of a "worktime" figure in the appropriate subcolumn(s), the lowest level of maintenance authorized to perform the function listed in column 3. This figure represents the active time required to perform that maintenance function at the indicated category of maintenance. If the number or complexity of the tasks within the listed maintenance function vary at different

maintenance categories, appropriate "worktime" figures will be shown for each category. The number of task-hours specified by the "worktime" figure represents the average time required to restore an item (assembly, subassembly, component, module, end item or system) to a serviceable condition under typical field operating conditions. This time includes preparation time, troubleshooting time, and quality assurance/quality control time in addition to the time required to perform the specific tasks identified for the maintenance functions authorized in the maintenance allocation chart. Subcolumns of column 4 are as follows:

C — Operator/Crew
O — Organizational
F — Direct Support
H — General Support
D — Depot

e. Column 5, Tools and Equipment. Column 5 specifies by code, those common tool sets (not individual tools) and special tools, test, and support equipment required to perform the designated function.

f. Column 6, *Remarks.* Column 6 contains an alphabetic code which leads to the remark in section IV, Remarks, which is pertinent to the item opposite the particular code.

C-4. Tool and Test Equipment Requirements (Sec III).

a. Tool or Test Equipment Reference Code. The numbers in this column coincide with the numbers used in the tools and equipment column of the MAC. The numbers indicate the applicable tool or test equipment for the maintenance functions.

b. Maintenance Category. The codes in this column indicate the maintenance category allocated the tool or test equipment.

c. Nomenclature. This column lists the noun name and nomenclature of the tools and test equipment required to perform the maintenance functions.

d. National/NATO Stock Number. This column lists the National/NATO stock number of the specific tool or test equipment.

e. Tool Number. This column lists the manufacturer's part number of the tool followed by the Federal Supply Code for manufacturers (5-digit) in parentheses.

C-5. Remarks (Sec IV).

a. Reference Code. This code refers to the appropriate item in section II, column 6.

b. Remarks. This column provides the required explanatory information necessary to clarify items appearing in section II.

SECTION II MAINTENANCE ALLOCATION CHART
FOR
MAST AB-903/G

(1) GROUP NUMBER	(2) COMPONENT/ASSEMBLY	(3) MAINTENANCE FUNCTION	(4) MAINTENANCE CATEGORY					(5) TOOLS AND EQPT.	(6) REMARKS
			C	O	F	H	D		
00	MAST AB-903/G	Install			0.8			1 thru 7,9	
		Inspect	0.1						
		Service		0.2				10	
		Adjust			0.2			1 thru 7,9	A
		Replace			0.3			1 thru 7,9	
		Repair			0.3			1 thru 7.9	B
		Repair				1.5		1 thru 9	
		Overhaul					2.0	1 thru 9	

SECTION III TOOL AND TEST EQUIPMENT REQUIREMENTS FOR

MAST AB-903/G

TOOL OR TEST EQUIPMENT REF CODE	MAINTENANCE CATEGORY	NOMENCLATURE	NATIONAL/NATO STOCK NUMBER	TOOL NUMBER
1	F, H, D	TOOL KIT, ELECTRONIC EQUIPMENT TK-105/G	5180-00-610-8177	
2	F, H, D	TOOL KIT, ELECTRONIC EQUIPMENT TK-100/G	5180-00-605-0079	
3	C, F, H, D	SCREWDRIVER, FLT. TIP: LT. DTY; PLASTIC HANDLE; 0.030 IN. THK X 3/16 IN. WD TIP; 6 IN. NOM BLADE LENGTH	5120-00-260-4837	
4	F, H, D	WRENCH ADJUSTABLE, OPEN END; SINGLE HEAD STEEL, CHROME OR NICKEL PLATED, 6 IN. NOM. SIZE	5120-00-264-3795	
5	F, H, D	WRENCH SET, SOCKET: SQ. DRIVE 3/8 IN. DRIVE SIZE: 12 PT: SOCKET; W/CASE FED. SPEC. GGG-W-00641	5120-00-449-8149	
6	F, H, D	WRENCH, TORQUE; RIGID FRAME END DRIVE STYLE DIAL INDICATING TORQUE MECHANISM W/VISUAL INDICATING MECHANISM: 1/4 IN. SQ MALE DRIVE, 0 TO 75 INCH POUNDS RATED CAPACITY; W/CASE	5120-00-585-8434	
7	F, H, D	WRENCH SET, SOCKET: 1/4 IN DRIVE SIZE; HEX AND 12 PT. SOCKETS: W/CASE; FED SPEC GGG-W-00641	*	
8	H, D	PLIERS, RETAINING RING (WALDEN KOHINOOR INC. #22)	5120-00-293-2513	
9	F, H, D	0-60 POUND SPRING SCALE	6670-00-238-9777	
10	O	TOOL KIT, ELECTRONIC EQUIPMENT TK-101	5180-00-064-5178	

* THE NATIONAL STOCK NUMBER THAT IS MISSING FROM THIS LIST HAS BEEN REQUESTED AND WILL BE ADDED BY A CHANGE TO THE LIST UPON RECEIPT.

SECTION IV. REMARKS

REFERENCE CODE	REMARKS
A	CABLE TENSION AND WINCH BRAKE
B	REPLACE GUY ASSEMBLIES, ANCHORS, MOUNTING HARDWARE, AND PULLEYS.

INDEX

	Paragraph	Page
Adapter unit, counterpoise	5-5	5-4
Additional equipment required	1-9	1-4
Adjustment:		
Cable tension	6-5	6-1
Procedures, final	7-6	7-9
Winch brake	6-4	6-1
Antenna, orientation	2-4	2-1
Application, system	1-10	1-4
Assemblies:		
Brake	5-3	5-2
Cable	5-4	5-2
Counterpoise tubes on antenna adapter	2-9	2-6
Authority, demolition	9-3	9-2
Base cap, replacement	6-6	6-2
Brake assembly	5-3	5-2
Cables:		
Prestrech assemblies	7-7	7-9
Tension, adjustment	5-4	5-2
Characteristics, technical	1-5	1-1
Checking unpacked equipment	2-2	2-1
Components:		
Description	5-2	5-1
Mast, for ground installation	2-5	2-2
Table	1-6	1-2
Counterpoise:		
Adapter unit	5-5	5-4
Assembly and Antenna AS-1729/VRC	2-8	2-5
Tubes, assembly	2-9	2-6
Demolition, authority	9-3	9-2
Description:		
Components, mast AB-903/G	5-2	5-1
Minor components	1-8	1-2
Destruction, methods	9-4	9-2
Disassembly:		
Equipment	9-1	9-1
Mast AB-903/G	7-3	7-1
Equipment:		
Additional	1-9	1-4
Checking unpacked	2-2	2-1
Disassembly	9-1	9-1
Erecting mast	2-7	2-2
Final adjustment procedures	7-6	7-9
Final testing procedures	7-8	7-10
Forms and records	1-3	1-1
Ground installation, mast components	2-5	2-2
Inspections and physical tests	6-8	6-2
Installation, mast components for ground	2-5	2-2
Maintenance:		
Cleaning	4-6	4-2

	Paragraph	Page
Operator:		
Daily preventive maintenance checks and service chart	4-5	4-2
Preventive maintenance	4-3	4-1
Scope	4-1	4-1
Organizational:		
Monthly maintenance	4-10	4-3
Monthly preventive maintenance checks and services chart	4-11	4-3
Preventive maintenance	4-9	4-3
Quarterly preventive maintenance checks and services chart	4-12	4-3
Scope	4-7	4-2
Mast AB-903/G:		
Description	1-7	1-2
Disassembly	7-3	7-1
Erecting	2-7	2-2
Reassembly	7-4	7-5
Setup, preparation	2-6	2-2
Mast and antenna, orientation	2-4	2-1
Mast components, ground installation	2-5	2-2
Materials and tools required:		
Depot maintenance	8-2	8-1
Organizational maintenance	4-8	4-3
Methods, destruction	9-4	9-2
Minor components, description	1-8	1-2
Operating instructions	3-2	3-1
Operation, general	3-1	3-1
Operator:		
Daily preventive maintenance checks and services chart	4-5	4-2
Preventive maintenance	4-3	4-1
Preventive maintenance checks and service periods	4-7	4-2
Scope	4-1	4-1
Organization, troubleshooting	6-3	6-1
Organizational:		
Monthly maintenance	4-10	4-3
Monthly preventive maintenance checks and services chart	4-11	4-3
Preventive maintenance	4-9	4-3
Quarterly maintenance	4-12	4-3
Quarterly preventive maintenance checks and services chart	4-13	4-3
Scope	4-7	4-2
Tools and materials required	4-8	4-3
Orientation, mast and antenna	2-4	2-1
Physical tests and inspections	6-8	6-2
Preparation, mast setup	2-6	2-2
Prestrech cables	7-7	7-9
Publications, indexes	1-2	1-1
Purpose and use	1-4	1-1
Reassembly:		
Mast AB-903/G	7-4	7-5
Winch assembly	7-5	7-8
Records and forms	1-3	1-1
Repacking, shipment or limited storage	9-2	9-2
Replacement, base rep	6-6	6-2
Scope:		
General	1-1	1-1
Operator maintenance	4-1	4-1
Organizational maintenance	4-7	4-2
Selection, site	2-3	2-1
Setup, preparation for mast	2-6	2-2
Shipment or limited storage, repackaging	9-2	9-2
Site, selection	2-3	2-1
System application	1-10	1-4

	Paragraph	Page
Table, components	1-6	1-2
Technical characteristics	1-5	1-1
Testing procedures, final	7-8	7-10
Tools and equipment required:		
Depot maintenance	8-2	8-1
Direct support maintenance	6-2	6-1
General support maintenance	7-2	7-1
Operator maintenance	4-2	4-1
Organizational maintenance	4-8	4-3
Troubleshooting procedures, organization	6-3	6-1
Tubes, assembly of counterpoise on antenna adaptor	2-9	2-6
Unpacked equipment, checking	2-2	2-1
Unpacking	2-1	2-1
Use, purpose	1-4	1-1
Winch:		
Assembly, reassembly	7-5	7-8
Brake, adjustment	6-4	6-1

By Order of the Secretary of the Army:

W. C. WESTMORELAND,
General, United States Army,
Chief of Staff.

Official:

KENNETH G. WICKHAM,
Major General, United States Army,
The Adjutant General.

Distribution:

Active Army:

USASA (2)
CNGB (1)
Dir of Trans (1)
CofEngrs (1)
TSG (1)
CofSptS (1)
ACSC-E (2)
USAMB (10)
USAARENBD (2)
USCONARC (2)
USAMC (1)
USAMICOM (2)
USAECOM (2)
USAESC (70)
ARADCOM (2)
ARADCOM Rgn (1)
OS Maj Comd (2)
USACDCCEA (10)
USACDCCEA (1)
USACDCCEA (Ft Huachuca) (1)
USASTRATCOM (2)
USATECOM (2)
Armies (1)
1st Cav Div. (2)
Ft Carson (7)
Ft Huachuca (5)
WSMR (2)
Svc Colleges (1)
USASCS (50)
USASESS (50)
Army Dep (2) except
LBAD (20)
SAAD (30)
TOAD (14)
ATAD (10)
LEAD (7)
NAAD (3)
SVAD (3)
Gen Dep (1)
Sig Sec, Gen Dep (4)
Sig Dep (6)
USACRREL (2)
USAERDAA (2)
USAERDAW (2)
Sig FLDMS (1)
Units org under fol TOE:
11-158 (1)
29-134 (1)

ARNG: State AG (3).
USAR: None.
For explanation of abbreviations used, see AR 910-50.

☆ U.S. GOVERNMENT PRINTING OFFICE : 1994 O - 300-421 (82926)

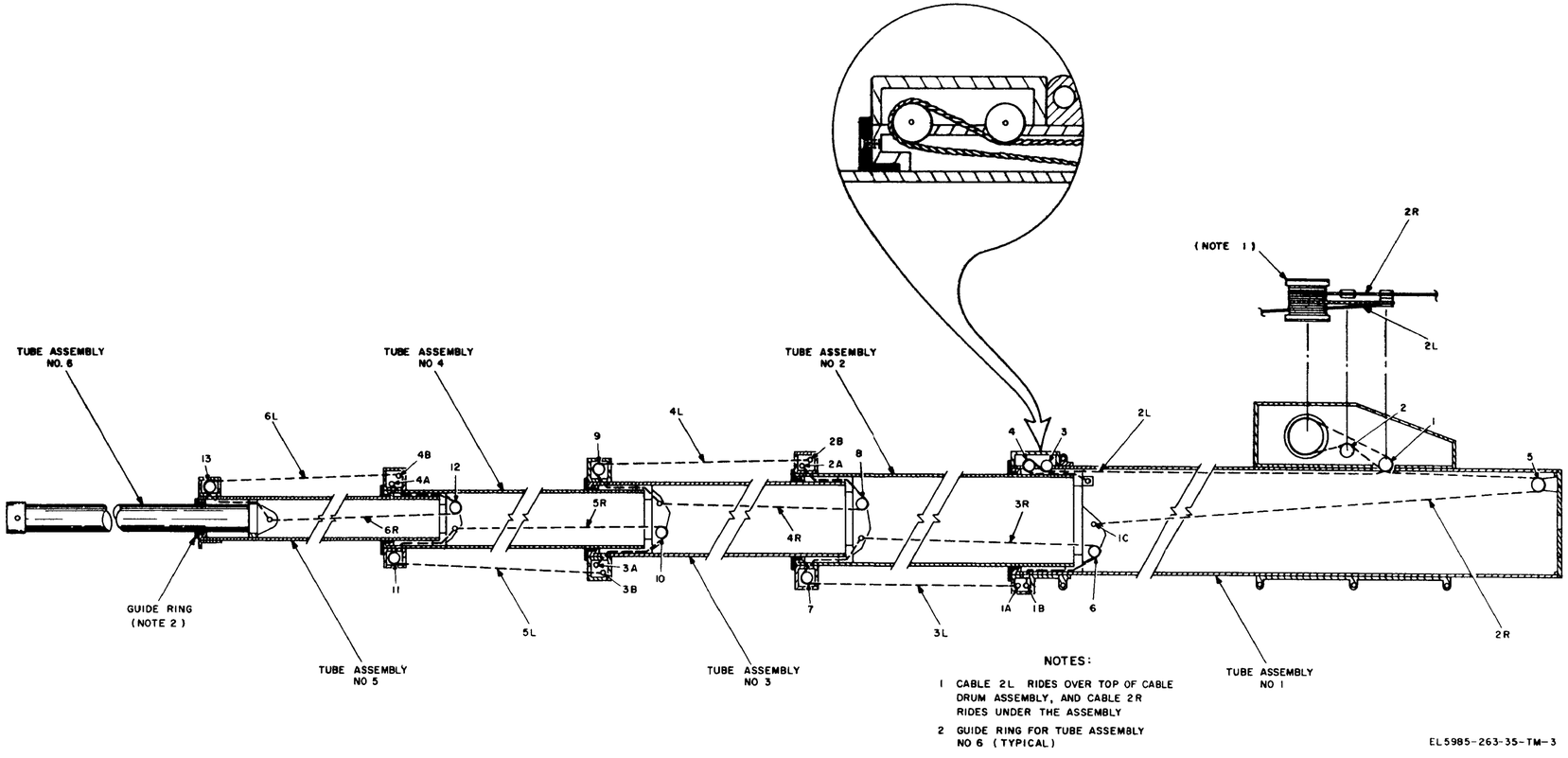

Figure 5-1. Mast AB-903/G Cabling and pully diagram

This fine document...

Was brought to you by me:

Liberated Manuals -- free army and government manuals

Why do I do it? I am tired of sleazy CD-ROM sellers, who take publicly available information, slap “watermarks” and other junk on it, and sell it. Those masters of search engine manipulation make sure that their sites that sell free information, come up first in search engines. They did not create it... They did not even scan it... Why should they get your money? Why are not letting you give those free manuals to your friends?

I am setting this document FREE. This document was made by the US Government and is NOT protected by Copyright. Feel free to share, republish, sell and so on.

I am not asking you for donations, fees or handouts. If you can, please provide a link to liberatedmanuals.com, so that free manuals come up first in search engines:

<A HREF=http://www.liberatedmanuals.com/>Free Military and Government Manuals</A>

- Sincerely
  Igor Chudov
  http://igor.chudov.com/